PLAN SYMBOLS

- COMM — COMMUNICATION REINFORCED CONCRETE ENCASED DUCTBANK
- UE — UE — ELECTRICAL REINFORCED CONCRETE ENCASED DUCTBANK
- ELECTRICAL DIRECT BURIED CONDUITS/DUCTBANK
- ELECTRICAL EXPOSED CONDUIT
- LP1-3 — HOMERUN TO PANEL "LP1". "3" IS THE CIRCUIT NO.
- LIQUIDTIGHT FLEXIBLE CONDUIT
- EXPLOSION-PROOF FLEXIBLE METAL CONDUIT
- CONDUIT OR CIRCUIT CONTINUED ON ANOTHER PLAN OR VIEW
- STUBBED AND CAPPED CONDUIT
- CONDUIT TURNED DOWN
- CONDUIT TURNED UP
- MAIN AND DOWN CONDUCTORS
- LP — EXPOSED LIGHTNING PROTECTION MAIN SIZE GROUNDING CONDUCTOR. #2 COPPER
- GROUND COUNTERPOISE #4/0 BARE CU (BELOW GRADE)
- G — #2/0 BARE CU (ABOVE GRADE)
- GROUNDING CONNECTION, EXOTHERMIC WELD
- GROUNDING CONNECTION, BOLTED
- GROUND TEST WELL
- GROUND ROD
- AIR TERMINAL
- GROUND REEL
- GROUND BUS BAR
- MH-### T3 — ELECTRICAL MANHOLE, T3 = TYPE 3
- CHH-## T3 — COMMUNICATIONS HANDHOLE, T3 = TYPE 3
- L1 OR L1 — POLE MOUNTED LUMINARE, WITH LETTER INDICATING FIXTURE TYPE (SEE SHEET E-510 FOR FIXTURE SCHEDULE FOR HEIGHTS AND ADDITIONAL INFORMATION)
- EXPLOSION-PROOF CONDUIT SEAL
- EXPLOSION-PROOF CONDUIT UNION
- DISCONNECT SWITCH
- COMBINATION MOTOR STARTER
- HEATER
- CR — CARD READER
- GC — GATE CONTROLLER
- IC — INTERCOM
- LD — LOOP DETECTOR
- GM — GATE MOTOR
- FIXED CAMERA
- 360° MULTI-SENSOR CAMERA
- ACS — ACCESS CONTROL SYSTEM
- ICM — INTERCOM MASTER
- EMERGENCY FUEL SHUTOFF STATION
- JUNCTION BOX
- ALARM HORN
- HORN/STROBE COMBINATION
- EXIT SIGN
- WALL PACK
- OR — LIGHT FIXTURE WITH BATTERY BACKUP
- MOV # — MOTOR-OPERATED VALVE
- AE ### — WATER DETECTOR
- CV ### — CONTROL VALVE
- DPT ### — DIFFERENTIAL PRESSURE TRANSMITTER
- FC ### — FLOW CONTROL VALVE
- FE ### — FLOW ELEMENT
- FS ### — FLOW SWITCH
- FT ### — FLOW TRANSMITTER
- HS ### — HAND SWITCH
- ME ### — MOISTURE ELEMENT
- MS ### — MOISTURE SWITCH/SENSOR
- TS ### — TEMPERATURE SWITCH
- TT ### — TEMPERATURE TRANSMITTER
- JY ### — SOLENOID
- LSL ### — LEVEL SWITCH, LOW
- LSLL ### — LEVEL SWITCH, LOW-LOW
- LSH ### — LEVEL SWITCH, HIGH
- LSHH ### — LEVEL SWITCH, HIGH-HIGH
- LT ### — LEVEL TRANSMITTER
- PDS ### — PRESSURE DIFFERENTIAL SWITCH
- PIT ### — PRESSURE INDICATING TRANSMITTER
- PT ### — PRESSURE TRANSMITTER
- TE ### — TEMPERATURE ELEMENT/RTD
- TSH ### — TEMPERATURE SWITCH-HIGH
- UI ### — MULTIVARIABLE INDICATOR
- UIT ### — MULTIVARIABLE INDICATING TRANSMITTER
- VT ### — VIBRATION TRANSMITTER
- MWTS ### — MOTOR WINDING TEMPERATURE SWITCHES/ THERMOSTATS
- DEVICE / INSTRUMENTATION AS INDICATED ON PLANS

SECTION AND DETAIL IDENTIFICATION

NUMBER INDICATES DETAIL/ ELEVATION/PHOTO DESIGNATION. LETTER INDICATES SECTION DESIGNATION.

DETAIL/SECTION/ELEVATION — 1 / E-101

SECTION, DETAIL, AND ELEVATION TITLE

NOT TO SCALE (OR PLACE SCALE BAR HERE)

DRAWING NUMBER WHERE DETAIL/ELEVATION/PHOTO IS SHOWN

NORTH

NUMBER INDICATES DETAIL DESIGNATION — 1

SHEET NUMBER WHERE DETAIL IS SHOWN — E401

NUMBER INDICATES DETAIL DESIGNATION — 1

SHEET NUMBER WHERE DETAIL IS SHOWN — E-501

LETTER INDICATES DETAIL DESIGNATION — A

SHEET NUMBER WHERE DETAIL IS SHOWN — E-501

DIAGRAM SYMBOLS

- GROUND CONNECTION
- A B — (A)CONTACT-NORMALLY OPEN (B)CONTACT-NORMALLY CLOSED
- C — CONTACTOR
- DISCONNECT SWITCH
- CONNECTION
- SOLENOID VALVE COIL
- 100AT 100AF 3P LSIG NEMA 1 — 100AT (BREAKER TRIP FRAME RATING AS INDICATED) 100AF (BREAKER FRAME RATING AS INDICATED) 3P (# OF PHASES AS INDICATED) LSIG (BREAKER TRIP TYPES, LONG TIME, SHORT TIME, INSTANTANEOUS, AND GROUND AS INDICATED) COMBINATION MOTOR CIRCUIT PROTECTOR, NON-REVERSING FULL VOLTAGE STARTER WITH CONTROL POWER TRANSFORMER (TYPE AND NEMA SIZE AS INDICATED), AND OVERLOAD
- 15 KVA 480-208Y/120V — TRANSFORMER, DELTA-GROUNDED WYE, 3 PHASE 15 KVA, (SIZE AS INDICATED) 480-208Y/120V (PRIMARY VOLTAGE / SECONDARY VOLTAGE AS INDICATED)
- HEATER
- DASHED LINE INDICATES WIRING REMOTE FROM DEVICE. WIRE COLOR DESIGNATION: B-BLACK, R-RED, BL-BLUE, ETC. SOLID LINE INDICATES CIRCUITRY WITHIN THE DEVICE.
- M — MOTOR (HP SIZE AS INDICATED)
- CIRCUIT BREAKER
- SRx — RELAY, CONTACT (NORMALLY OPEN)
- PUSHBUTTON, MOMENTARY, NORMALLY OPEN, NORMALLY CLOSED
- EXPULSION FUSE
- FUSE
- TEMPERATURE SWITCH
- R G — INDICATING LIGHTS, RED, GREEN
- OVERLOAD
- LEVEL SWITCH, NORMALLY CLOSED, OPENS ON RISING LEVEL
- LEVEL SWITCH, NORMALLY OPEN, OPENS ON FALLING LEVEL
- A — LIMIT SWITCH, NORMALLY CLOSED
- B — LIMIT SWITCH, NORMALLY OPEN
- TIME DELAY RELAY CONTACTS, DELAY ON ENERGIZATION (A) NORMALLY CLOSED (B) NORMALLY OPEN
- NORMALLY OPEN TIME DELAY RELAY CONTACT, DELAY ON DEENERGIZATION
- FLOW SWITCH, NORMALLY OPEN, CLOSED ON DETECTION OF FLOW.
- K — KEYED BYPASS SWITCH
- XOO / OOX — 3 POSITION SELECTOR SWITCH: X REPRESENTS CLOSED AND O REPRESENTS OPEN IN VARIOUS SWITCH POSITIONS
- ENCLOSURE
- DRAWOUT CONNECTION
- LOAD BREAK ELBOW
- 3 — LIGHTNING ARRESTOR. NUMBER OF UNITS INDICATED.
- TRANSFER SWITCH AS NOTED
- PLC OUTPUT
- PLC INPUT
- TD — TIME DELAY RELAY

GENERAL NOTES: APPLICABLE TO ALL ELECTRICAL FUELING SHEETS

1. SYMBOL SIZE DOES NOT IMPLY EQUIPMENT SIZE, UON.
2. NOT ALL SYMBOLS SHOWN ON THIS SHEET ARE USED IN THIS PROJECT.
3. ALL JUNCTION BOXES SHALL BE RATED NEMA 4X STAINLESS STEEL WHEN LOCATED OUTDOORS, UON.
4. COORDINATE ALL NEW DUCTBANKS WITH OTHER UTILITIES IN THE AREA.
5. PROVIDE AN INSULATED GREEN EQUIPMENT GROUNDING CONDUCTOR FOR ALL CIRCUITS IN CONDUITS OR RACEWAYS.
6. ALL ELECTRICAL WORK AND MATERIAL IS NEW, AND PROVIDED BY THE ELECTRICAL SUBCONTRACTOR UNLESS NOTED OTHERWISE.
7. ALL DARK LINEWEIGHT IS NEW WORK AND ALL LIGHT LINEWEIGHT IN EXISTING, UON.
8. CONDUIT ROUTING IS SCHEMATIC IN NATURE. ROUTE ALL CONDUIT TO AVOID OBSTRUCTIONS. WHERE CONDUIT IS EXPOSED/ABOVE GRADE, ROUTE CONDUIT TO AVOID TRIPPING HAZARDS AND BLOCKING EQUIPMENT ACCESS. CONDUITS MUST BE SUPPORTED AT INTERVALS NOT EXCEEDING NEC REQUIREMENTS.
9. ALL PRODUCTS SHALL BE LISTED BY A NATIONALLY RECOGNIZED TESTING LABORATORY (NRTL). (E.G. UNDERWRITERS LABORATORIES (UL) OR EQUIVALENT)

ABBREVIATIONS

A	AMPERES (AMP)
AC	ALTERNATING CURRENT
AF	AMPS FRAME
AFF	ABOVE FINISHED FLOOR
AFG	ABOVE FINISHED GRADE
AIC	AMPERE INTERRUPTING CAPACITY
APPROX	APPROXIMATE
AST	ABOVE GROUND STORAGE TANK
AT	AMPS TRIP
ATG	AUTOMATIC TANK GAUGING
C	CONDUIT
CKT	CIRCUIT
COM	COMMUNICATION
CPT	CONTROL POWER TRANSFORMER
CU	COPPER
DB	DUCTBANK
DC	DIRECT CURRENT
DP	DISTRIBUTION PANEL
DPDT	DOUBLE POLE DOUBLE THROW
DS	DISCONNECT SWITCH
DT	DENSITY TRANSMITTER
EFSO	EMERGENCY FUEL SHUTOFF
EHH	ELECTRICAL HANDHOLE
EMH	ELECTRICAL MANHOLE
EOL	END OF LINE
EP	INDICATES EXPLOSION PROOF EQUIPMENT CLASS I, GROUP D HAZARDOUS AREA
FACU	FIRE ALARM CONTROL UNIT
FLA	FULL LOAD AMPS
FO	FIBER OPTIC
FSC	FUEL SYSTEM CONTROL
FSCP	FUEL SYSTEM CONTROL PANEL
FT	FEET, FLOW TRANSMITTER
GFEP	GROUND FAULT EQUIPMENT PROTECTION
GFI	GROUND FAULT INTERRUPTER
GND	GROUND
HCTS	HYDRANT CART TEST STAND
HMI	HUMAN MACHINE INTERFACE
HP	HORSEPOWER
HS	HAND SWITCH
HZ	HERTZ
I/O	INPUT/OUTPUT
INCL	INCLUDING
INST	INSTRUMENT / INSTRUMENTATION
JY	SOLENOID
KVA	KILOVOLT-AMPS
KAIC	KILOAMPS INTERRUPTING CAPACITY
KW	KILOWATT
LDP	LEVEL/LEAK DETECTION PANEL
LFMC	LIQUID-TIGHT FLEXIBLE METAL CONDUIT
LS	LEVEL SWITCH
LSH	LEVEL SWITCH, HIGH
LSHH	LEVEL SWITCH, HIGH-HIGH
LSL	LEVEL SWITCH, LOW
LSLL	LEVEL SWITCH, LOW-LOW
LT	LEVEL TRANSMITTER
LTG	LIGHTING
MCC	MOTOR CONTROL CENTER
MCP	MOTOR CIRCUIT PROTECTOR
MIN	MINIMUM
MOV	MOTOR OPERATED VALVE
MPC	MINI-POWER CENTER
MS	MOISTURE SENSOR
MWTS	MOTOR WINDING TEMPERATURE SWITCH
NC	NORMALLY CLOSED
NEC	NATIONAL ELECTRICAL CODE
NIC	NOT IN CONTRACT
NO	NORMALLY OPEN
OC	OCCUPANCY SENSOR
OIT	OPERATOR INTERFACE TERMINAL
OWS	OIL WATER SEPARATOR
OWSO	OIL WATER SEPARATOR (OIL)
OWSP	OIL WATER SEPARATOR (SEPARATION CHAMBER)
P	POLE
PB	PANELBOARD / PUSHBUTTON
PC	PHOTOCELL
PDC	POWER DISTRIBUTION CENTER
PDS	PRESSURE DIFFERENTIAL
PH	PHASE
PIT	PRESSURE INDICATING TRANSMITTER
PLC	PROGRAMMABLE LOGIC CONTROLLER
PT	PRESSURE TRANSMITTER
PR	PAIR
PRI	PRIMARY
PRT	PRODUCT RECOVERY TANK
PVC	POLYVINYL CHLORIDE
RCT	RECLAIM TANK
RFS	RECLAIM FILTER SEPARATOR
RTD	RESISTANCE TEMPERATURE DEVICE
RGAP	REMOTE GENERATOR ALARM PANEL
RGS	RIGID GALVANIZED STEEL CONDUIT
SLT	SANITARY LIFT STATION
SSRV	SOLID STATE REDUCED VOLTAGE
SYM	SYMMETRICAL
TEMP	TEMPERATURE
TLP	TANK LEVEL PANEL
TLV	TRUCK LOAD VALVE
TS	TEMPERATURE SWITCH
TSP	TWISTED SHIELDED PAIR
TT	TEMPERATURE TRANSMITTER
TYP	TYPICAL
UON	UNLESS OTHERWISE NOTED
UTP	UNSHIELDED TWISTED PAIR
V	VOLTS
WP	WEATHERPROOF
WTR	WATER
WTS	WINDING TEMPERATURE SWITCH
XFMR	TRANSFORMER

12/20/2023

REGISTERED PROFESSIONAL ENGINEER — 100084PE — OREGON — JULY 12, 2023 — TIMOTHY RENSHAW

EXPIRES: 12/31/2024

no.	date	by	ckd	description
A	12/21/23	TSR	BAW	ISSUED FOR PERMIT

ISSUED FOR PERMIT ONLY

BURNS McDONNELL
9400 WARD PARKWAY
KANSAS CITY, MO 64114
816-333-9400
Burns & McDonnell Engineering Co, Inc.

date	detailed
04/24/2023	S. JESBERG
designed	checked
T. RENSHAW	B. WINTER

PDX FUEL COMPANY L.L.C

PORTLAND INTERNATIONAL AIRPORT
5000 NE MARINE DR.
PORTLAND, OREGON 97218

PDX FACILITY IMPROVEMENTS

ELECTRICAL GENERAL NOTES, LEGEND & ABBREVIATIONS

project	contract
153929	

drawing **E-001** rev. **A**

file 153929E-001.dwg

NOTE:

1. SEE SHEET E-001 FOR GENERAL NOTES, LEGEND AND ABBREVIATIONS.

KEYED NOTE:

1. ONCE TANKS 5, 6 AND 7 ARE COMMISSIONED AND OPERATIONAL, DEMOLISH AND REMOVE ALL ELECTRICAL APPURTANCES ON THE STORAGE TANK. THIS INCLUDES BUT IS NOT LIMITED TO
   - A. CONDUIT
   - B. WIRING
   - C. ELECTRICAL SUPPORTS
   - D. ELECTRICAL EQUIPMENT
   - E. GROUNDING ELECTRODES
   - F. LIGHTING FIXTURES & OBSTRUCTION LIGHTS"
2. SEE ONE-LINE FOR DEMOLITION DETAILS.
3. DUCTBANK SHALL BE DEMOLISHED BACK TO A POINT TO BE INTERCEPTED AND EXTENDED.
4. BUILDING SHALL BE RELOCATED.

LEGEND:

DEMOLITION

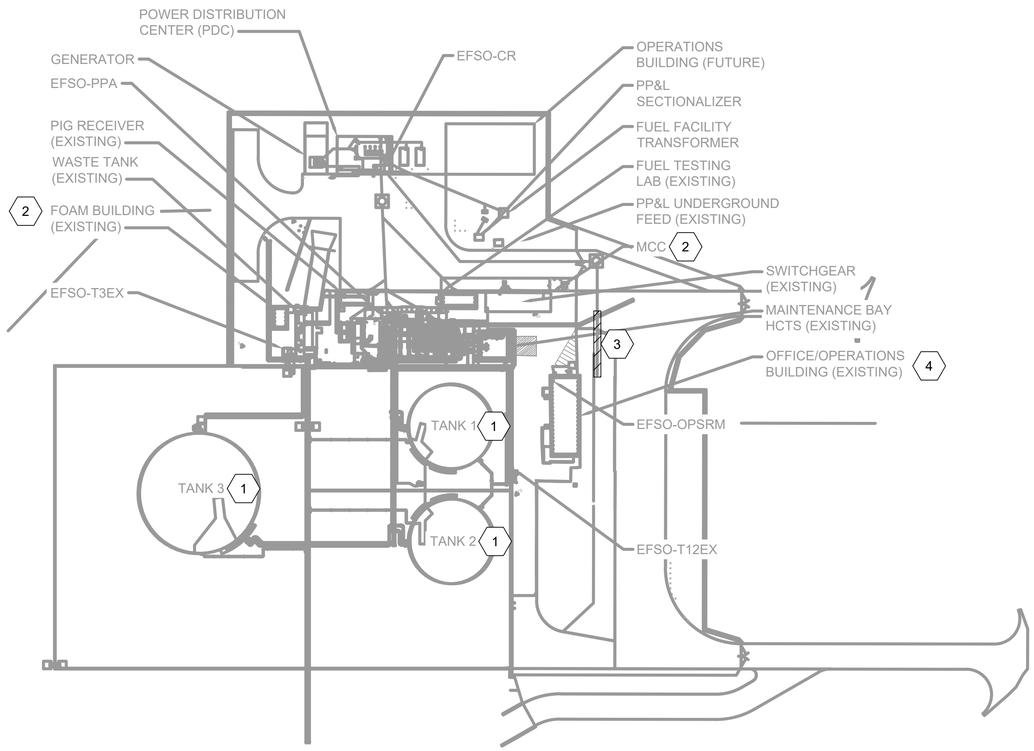

OVERALL ELECTRICAL DEMOLITION PLAN

0 60' 120'
SCALE IN FEET

NORTH

no.	date	by	ckd	description
A	12/21/23	TSR	BAW	ISSUED FOR PERMIT

ISSUED FOR PERMIT ONLY

BURNS McDONNELL
9400 WARD PARKWAY
KANSAS CITY, MO 64114
816-333-9400
Burns & McDonnell Engineering Co, Inc.

date	detailed
04/24/2023	S. JESBERG
designed	checked
T. RENSHAW	B. WINTER

PDX FUEL COMPANY L.L.C

PORTLAND INTERNATIONAL AIRPORT
5000 NE MARINE DR.
PORTLAND, OREGON 97218

PDX FACILITY IMPROVEMENTS
OVERALL ELECTRICAL DEMOLITION PLAN

project	contract
153929	

drawing **ED101** rev. **A**

file 153929ED101.dwg

12/20/2023

REGISTERED PROFESSIONAL ENGINEER 100084PE OREGON JULY 12, 2022 TIMOTHY RENSHAW
EXPIRES: 12/31/2024

\\BMCD\DFS\CLIENTS\ANF\PORTLANDPORT\PDX\153929_FACILITYIMPRV\DESIGN\ELEC\SHEETS\153929ED101.DWG 12/18/2023 2:45 PM SNJESBERG

NOTES:

1. SEE SHEET E-001 FOR GENERAL NOTES, LEGEND AND ABBREVIATIONS.
2. SEE HAZARDOUS AREA DETAILS ON DRAWING E-502.
3. HAZARDOUS AREAS WITHIN THIS DRAWING SET ARE ONLY IDENTIFIED FOR AREAS WITHIN THIS PROJECT'S SCOPE OF WORK.
4. HAZARDOUS AREAS WITHIN THIS DRAWING SET ARE BASED ON ARTICLE 500, 501 AND 515 IN NFPA 70: NATIONAL ELECTRICAL CODE (2020), NFPA 407 STANDARD FOR AIRCRAFT FUEL SERVICING (2022) AND API RECOMMENDED PRACTICE 500 (NOV 2014) BASED ON THE PRESENCE OF FLAMMABLE LIQUIDS (CLASS I).
5. THIS FACILITY DISTRIBUTES THE FOLLOWING PRODUCTS/ADDITIVES:

   JET A - CLASS II LIQUID (CONSIDERED A CLASS I LIQUID FOR ELECTRICAL INSTALLATIONS PER NFPA 407)

KEYED NOTES:

1. INTERIOR OF TANK IS CONSIDERED CLASS I, DIVISION 1. HATCHING OMITTED FOR CLARITY.
2. GENERATOR HAS AN INTEGRAL BELLY TANK. DIESEL IS A CLASS II LIQUID WITH NO AREA CLASSIFICATION.

LEGEND:

- CLASS I, DIVISION 1, GROUP D (REQUIRES T3 RATED MOTORS/EQUIPMENT)
- CLASS I, DIVISION 2, GROUP D (REQUIRES T3 RATED MOTORS/EQUIPMENT)
- ENGINEERED CLASS I, DIVISION 1, GROUP D (REQUIRES T3 RATED MOTORS/EQUIPMENT)
- ENGINEERED CLASS I, DIVISION 2, GROUP D (REQUIRES T3 RATED MOTORS/EQUIPMENT)
- NON-CLASSIFIED

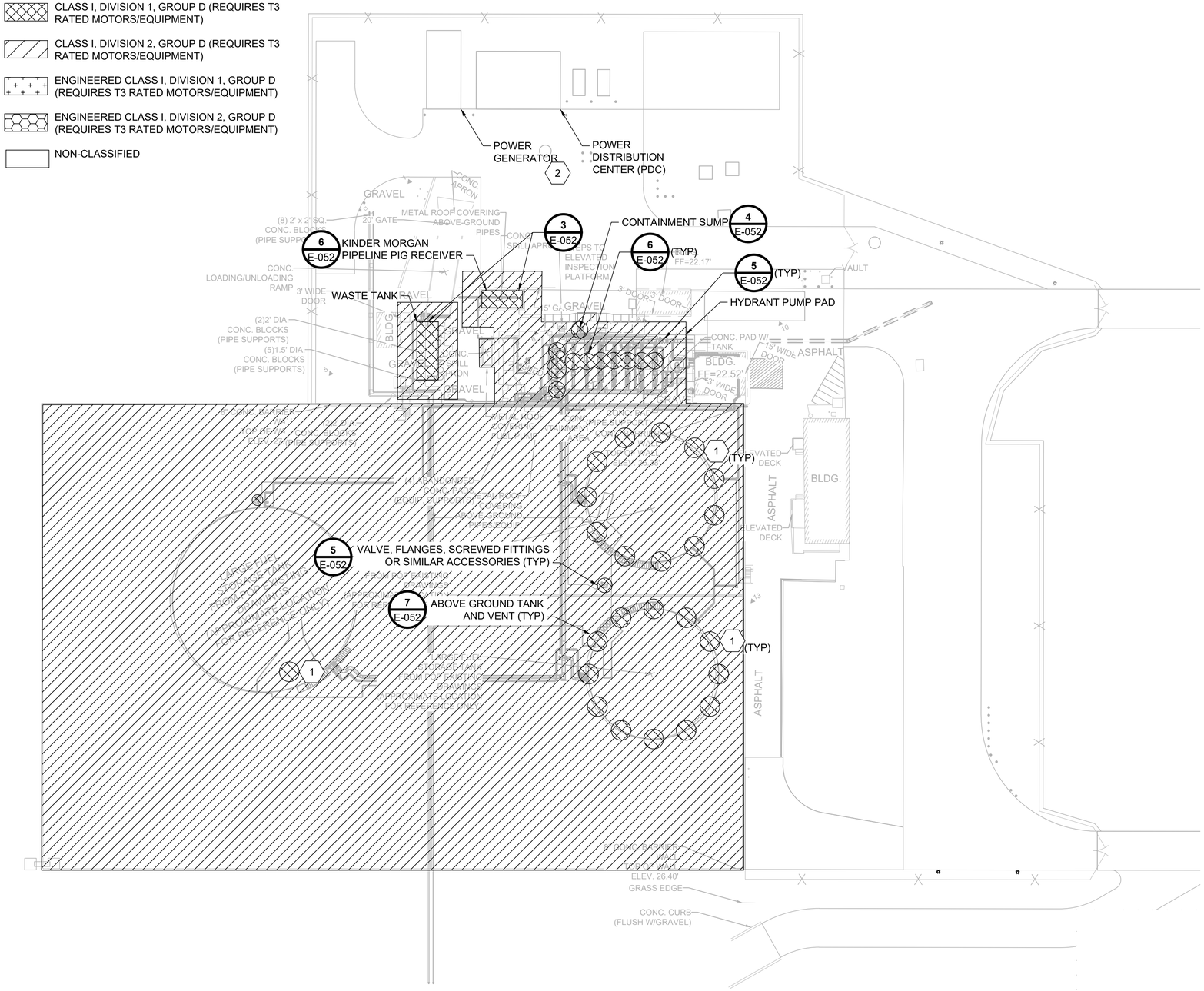

OVERALL ELECTRICAL PLAN - EXISTING

0 30' 60'
SCALE IN FEET

NORTH

12/20/2023

ENGINEERED PROFESSIONAL ENGINEER 100064PE OREGON JULY 12, 2022 TIMOTHY RENSHAW
EXPIRES: 12/31/2024

no.	date	by	ckd	description
A	12/21/23	TSR	BAW	ISSUED FOR PERMIT

ISSUED FOR PERMIT ONLY

BURNS McDONNELL
9400 WARD PARKWAY
KANSAS CITY, MO 64114
816-333-9400
Burns & McDonnell Engineering Co, Inc.

date	detailed
04/24/2023	S. JESBERG
designed	checked
T. RENSHAW	B. WINTER

PDX FUEL COMPANY L.L.C

PORTLAND INTERNATIONAL AIRPORT
5000 NE MARINE DR.
PORTLAND, OREGON 97218

PDX FACILITY IMPROVEMENTS
HAZARDOUS AREA PLAN - EXISTING

project	contract
153929	

drawing **E-050A** rev. **A**

file 153929E-050A.dwg

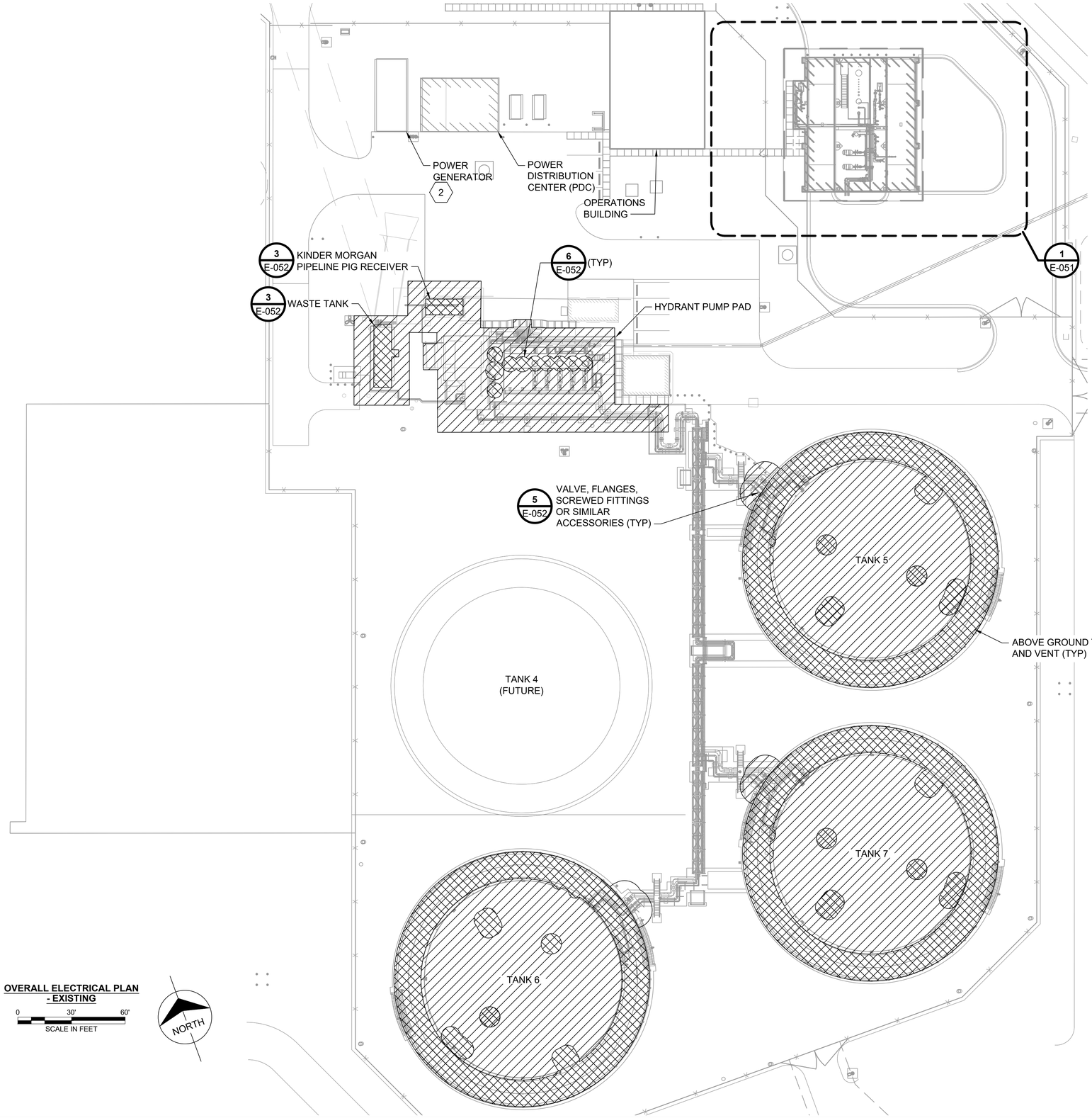

OVERALL ELECTRICAL PLAN - EXISTING

0 30' 60'
SCALE IN FEET

NOTES:

1. SEE SHEET E-001 FOR GENERAL NOTES, LEGEND AND ABBREVIATIONS.
2. SEE HAZARDOUS AREA DETAILS ON DRAWING E-052.
3. HAZARDOUS AREAS WITHIN THIS DRAWING SET ARE ONLY IDENTIFIED FOR AREAS WITHIN THIS PROJECT'S SCOPE OF WORK.
4. HAZARDOUS AREAS WITHIN THIS DRAWING SET ARE BASED ON ARTICLE 500, 501 AND 515 IN NFPA 70: NATIONAL ELECTRICAL CODE (2011), NFPA 407 STANDARD FOR AIRCRAFT FUEL SERVICING (2017) AND API RECOMMENDED PRACTICE 500 (NOV 2014) BASED ON THE PRESENCE OF FLAMMABLE LIQUIDS (CLASS I).
5. THIS FACILITY DISTRIBUTES THE FOLLOWING PRODUCTS/ADDITIVES:

   JET A - CLASS II LIQUID (CONSIDERED A CLASS I LIQUID FOR ELECTRICAL INSTALLATIONS PER NFPA 407)

KEYED NOTES:

1. INTERIOR OF TANK IS CONSIDERED CLASS I, DIVISION 1. HATCHING OMITTED FOR CLARITY.
2. GENERATOR HAS AN INTEGRAL BELLY TANK. DIESEL IS A CLASS II LIQUID WITH NO AREA CLASSIFICATION.

LEGEND:

- CLASS I, DIVISION 1, GROUP D (REQUIRES T3 RATED MOTORS/EQUIPMENT)
- CLASS I, DIVISION 2, GROUP D (REQUIRES T3 RATED MOTORS/EQUIPMENT)
- NON-CLASSIFIED

12/20/2023

REGISTERED PROFESSIONAL ENGINEER 100064PE OREGON DEC. 12, 2023 TIMOTHY RENSHAW
EXPIRES: 12/31/2024

no.	date	by	ckd	description
A	12/21/23	TSR	BAW	ISSUED FOR PERMIT

ISSUED FOR PERMIT ONLY

BURNS McDONNELL
9400 WARD PARKWAY
KANSAS CITY, MO 64114
816-333-9400
Burns & McDonnell Engineering Co, Inc.

date	detailed
04/24/2023	S. JESBERG
designed	checked
T. RENSHAW	B. WINTER

PDX FUEL COMPANY L.L.C

PORTLAND INTERNATIONAL AIRPORT
5000 NE MARINE DR.
PORTLAND, OREGON 97218

PDX FACILITY IMPROVEMENTS
HAZARDOUS AREA PLAN - FINAL

project	contract
153929	

drawing **E-050B** rev. **A**

file 153929E-050B.dwg

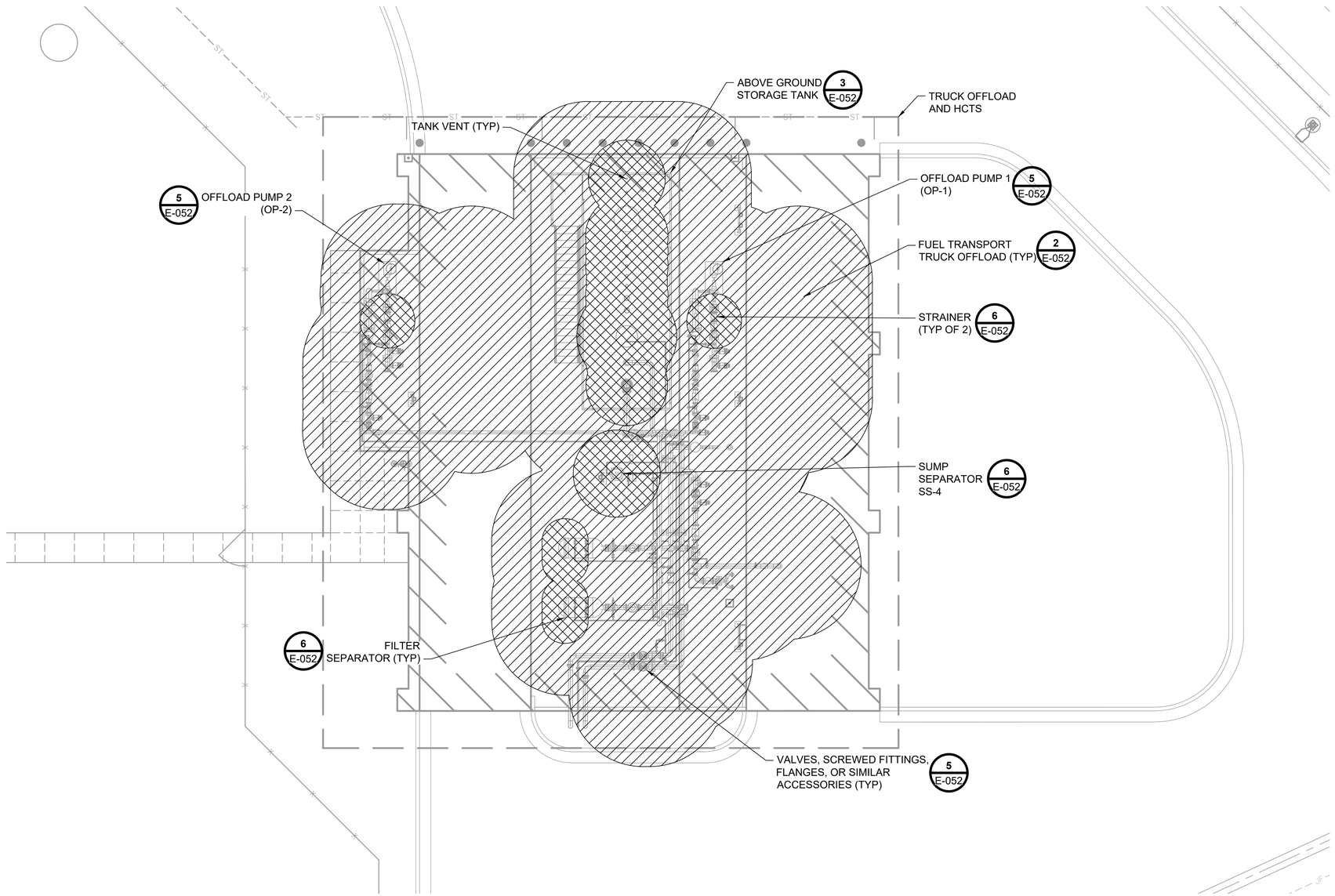

HAZARDOUS AREA ENLARGED PLAN - HCTS & OFFLOAD

0 4' 8' 16'
SCALE IN FEET

NORTH

NOTES:

1. SEE SHEET E-001 FOR GENERAL NOTES, LEGEND AND ABBREVIATIONS.
2. SEE HAZARDOUS AREA DETAILS ON DRAWING E-052.
3. HAZARDOUS AREAS WITHIN THIS DRAWING SET ARE ONLY IDENTIFIED FOR AREAS WITHIN THIS PROJECT'S SCOPE OF WORK.
4. HAZARDOUS AREAS WITHIN THIS DRAWING SET ARE BASED ON ARTICLE 500, 501 AND 515 IN NFPA 70: NATIONAL ELECTRICAL CODE (2011), NFPA 407 STANDARD FOR AIRCRAFT FUEL SERVICING (2017) AND API RECOMMENDED PRACTICE 500 (NOV 2014) BASED ON THE PRESENCE OF FLAMMABLE LIQUIDS (CLASS I).
5. THIS FACILITY DISTRIBUTES THE FOLLOWING PRODUCTS/ADDITIVES:

   JET A - CLASS II LIQUID (CONSIDERED A CLASS I LIQUID FOR ELECTRICAL INSTALLATIONS PER NFPA 407)

LEGEND:

- CLASS I, DIVISION 1, GROUP D (REQUIRES T3 RATED MOTORS/EQUIPMENT)
- CLASS I, DIVISION 2, GROUP D (REQUIRES T3 RATED MOTORS/EQUIPMENT)
- NON-CLASSIFIED

no.	date	by	ckd	description
A	12/21/23	TSR	BAW	ISSUED FOR PERMIT

ISSUED FOR PERMIT ONLY

BURNS McDONNELL
9400 WARD PARKWAY
KANSAS CITY, MO 64114
816-333-9400
Burns & McDonnell Engineering Co, Inc.

date	detailed
04/24/2023	S. JESBERG
designed	checked
T. RENSHAW	B. WINTER

PDX FUEL COMPANY L.L.C

PORTLAND INTERNATIONAL AIRPORT
5000 NE MARINE DR.
PORTLAND, OREGON 97218

PDX FACILITY IMPROVEMENTS
HAZARDOUS AREA ENLARGED PLAN - HCTS & OFFLOAD

project	contract
153929	
drawing	rev.
E-051	A

12/20/2023

REGISTERED PROFESSIONAL ENGINEER 100084PE OREGON JULY 13, 2023 TIMOTHY RENSHAW
EXPIRES: 12/31/2024

file 153929E-051.dwg

\\BMCD\DFS\CLIENTS\ANF\PORTLANDPORT\PDX\153929_FACILITYIMPRV\DESIGN\ELEC\SHEETS\153929E-051.DWG 12/18/2023 2:45 PM SNJESBERG

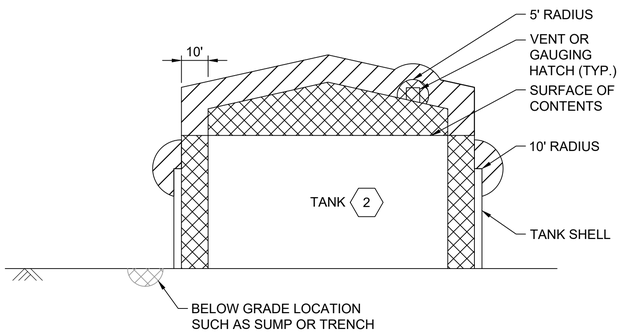

DETAIL 1 / E-050B
ABOVE GROUND TANK WITH TANK SHELL
NOT TO SCALE

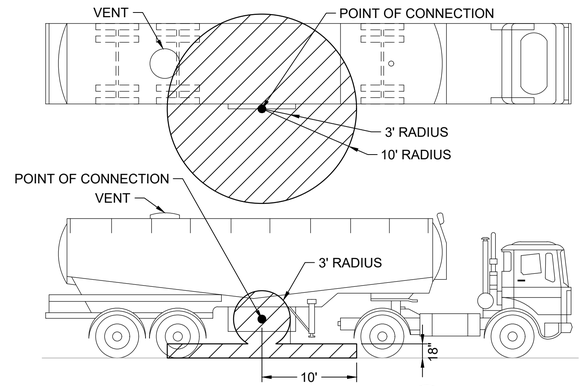

DETAIL 2 / E-051
FUEL TRANSPORT TRUCK OFFLOAD (BOTTOM CONNECTION)
NOT TO SCALE

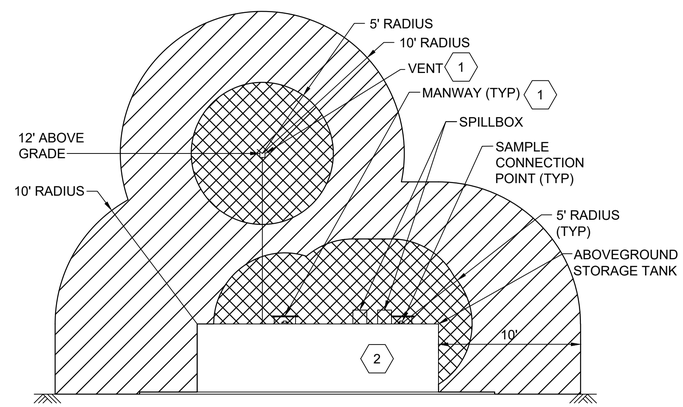

DETAIL 3 / E-050A, E-050B, E-051
TYPICAL ABOVEGROUND HORIZONTAL STORAGE TANK / RECOVERY TANK
NOT TO SCALE

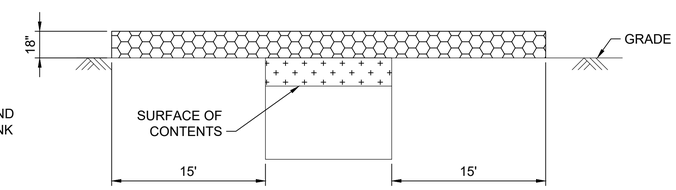

DETAIL 4 / E-050A
CONTAINMENT SUMP/LIFT STATION
NOT TO SCALE

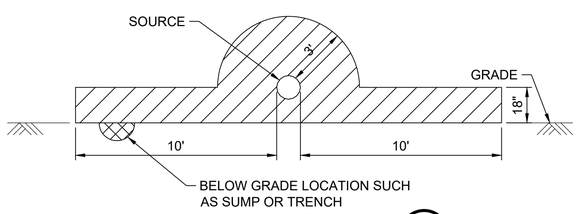

DETAIL 5 / E-050A, E-050B, E-051
PUMPS (LESS THAN 275 PSIG) AND PIPING WITH VALVES, SCREWED FITTINGS, FLANGES OR SIMILAR ACCESSORIES - OUTDOORS
NOT TO SCALE

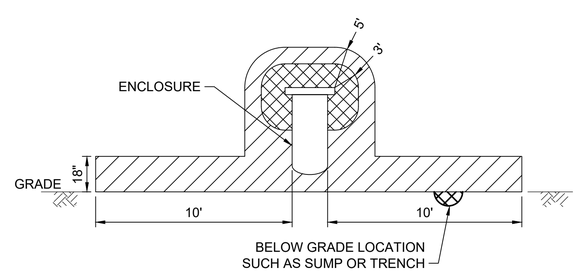

DETAIL 6 / E-050A, E-050B, E-051
SCRAPER LAUNCHERS AND RECEIVERS / STRAINERS / FILTER/SEPARATOR / SUMP SEPARATORS / FUEL BUCKET DRAIN / PROVER / CLAY TREATER / PRE-FILTER - OUTDOORS
NOT TO SCALE

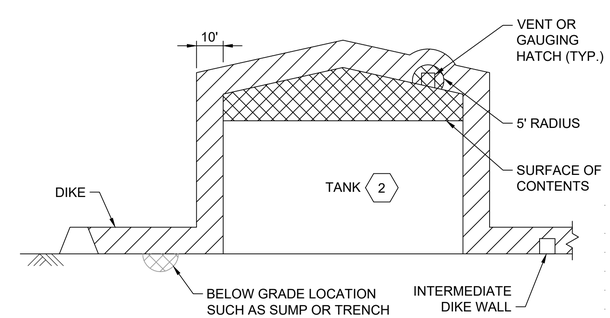

DETAIL 7 / E-050A
ABOVE GROUND TANK
NOT TO SCALE

NOTES:

1. SEE SHEET E-001 FOR GENERAL NOTES, LEGEND AND ABBREVIATIONS.
2. HAZARDOUS AREAS WITHIN THIS DRAWING SET ARE ONLY IDENTIFIED FOR AREAS WITHIN THIS PROJECT'S SCOPE OF WORK.
3. HAZARDOUS AREAS WITHIN THIS DRAWING SET ARE BASED ON ARTICLE 500, 501 AND 515 IN NFPA 70: NATIONAL ELECTRICAL CODE (2011), NFPA 407 STANDARD FOR AIRCRAFT FUEL SERVICING (2017) AND API RECOMMENDED PRACTICE 500 (NOV 2014) BASED ON THE PRESENCE OF FLAMMABLE LIQUIDS (CLASS I).
4. THIS FACILITY DISTRIBUTES THE FOLLOWING PRODUCTS/ADDITIVES:

   JET A - CLASS II LIQUID (CONSIDERED A CLASS I LIQUID FOR ELECTRICAL INSTALLATIONS PER NFPA 407)

KEYED NOTES:

1. POSITION AND NUMBER OF VENTS, MANWAYS, ETC. DEPENDENT ON TANK FABRICATOR.
2. SPACE ABOVE FUEL AND WITHIN THE TANK SHELL IS A CLASS I, DIVISION 1 AREA.

LEGEND:

- CLASS I, DIVISION 1, GROUP D (REQUIRES T3 RATED MOTORS/EQUIPMENT)
- CLASS I, DIVISION 2, GROUP D (REQUIRES T3 RATED MOTORS/EQUIPMENT)
- ENGINEERED CLASS I, DIVISION 1, GROUP D (REQUIRES T3 RATED MOTORS/EQUIPMENT)
- ENGINEERED CLASS I, DIVISION 2, GROUP D (REQUIRES T3 RATED MOTORS/EQUIPMENT)
- NON-CLASSIFIED

no.	date	by	ckd	description
A	12/21/23	TSR	BAW	ISSUED FOR PERMIT

ISSUED FOR PERMIT ONLY

BURNS McDONNELL
9400 WARD PARKWAY
KANSAS CITY, MO 64114
816-333-9400
Burns & McDonnell Engineering Co, Inc.

date	detailed
04/24/2023	S. JESBERG
designed	checked
T. RENSHAW	B. WINTER

PDX FUEL COMPANY L.L.C

PORTLAND INTERNATIONAL AIRPORT
5000 NE MARINE DR.
PORTLAND, OREGON 97218

PDX FACILITY IMPROVEMENTS
HAZARDOUS AREA DETAILS

12/20/2023

REGISTERED PROFESSIONAL ENGINEER 100084PE OREGON JULY 12, 2022 TIMOTHY RENSHAW
EXPIRES: 12/31/2024

project	contract
153929	

drawing **E-052** rev. **A**

file 153929E-052.dwg

NOTES:

1. SEE SHEET E-001 FOR GENERAL NOTES, LEGEND AND ABBREVIATIONS.

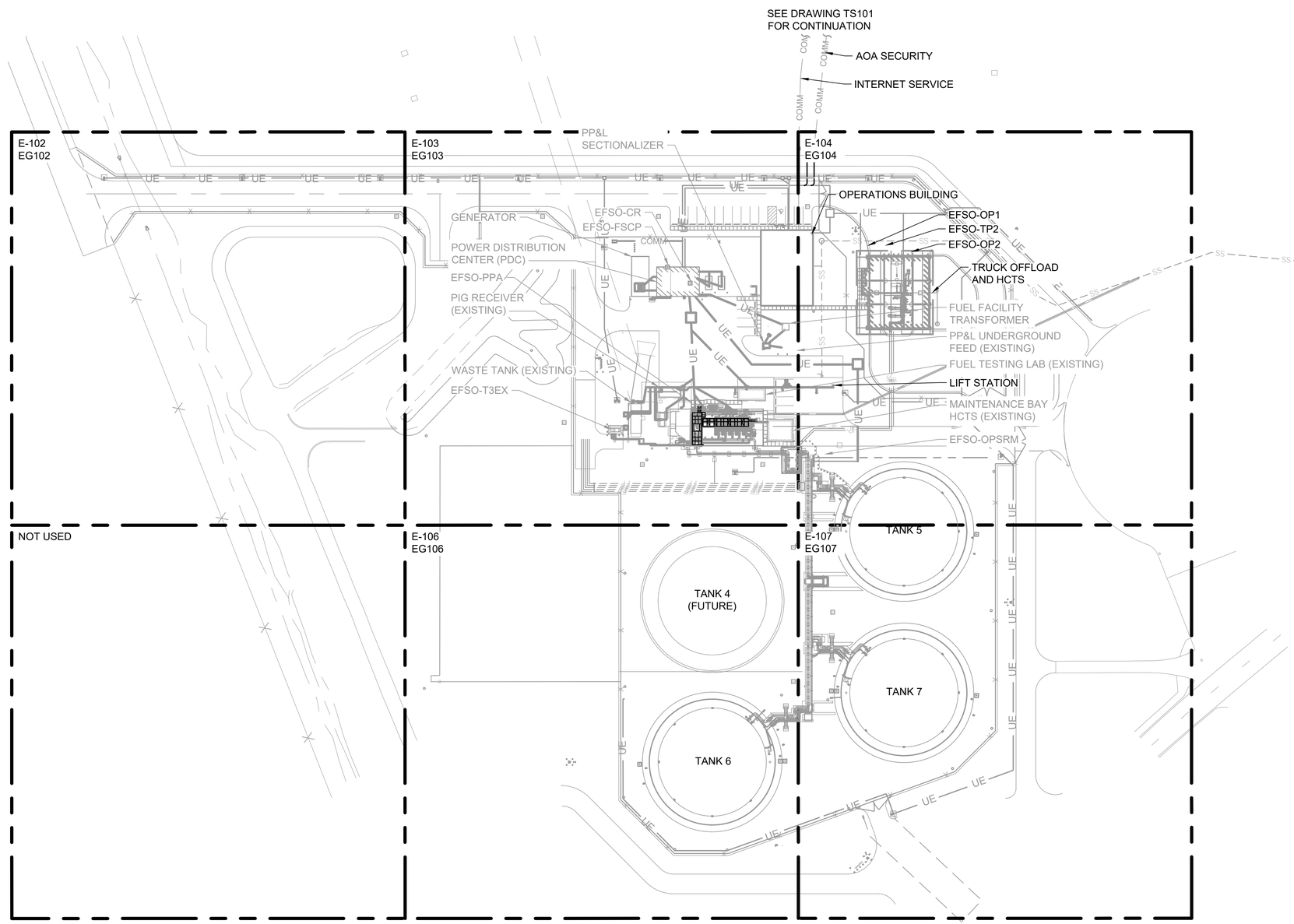

OVERALL ELECTRICAL PLAN

0 60' 120'
SCALE IN FEET

NORTH

no.	date	by	ckd	description
A	12/21/23	TSR	BAW	ISSUED FOR PERMIT

ISSUED FOR PERMIT ONLY

BURNS McDONNELL
9400 WARD PARKWAY
KANSAS CITY, MO 64114
816-333-9400
Burns & McDonnell Engineering Co, Inc.

date	detailed
04/24/2023	S. JESBERG
designed	checked
T. RENSHAW	B. WINTER

PDX FUEL COMPANY L.L.C

PORTLAND INTERNATIONAL AIRPORT
5000 NE MARINE DR.
PORTLAND, OREGON 97218

PDX FACILITY IMPROVEMENTS
OVERALL ELECTRICAL PLAN

project	contract
153929	

drawing **E-101** rev. **A**

file 153929E-101.dwg

12/20/2023

REGISTERED PROFESSIONAL ENGINEER 100084PE OREGON JULY 12, 2022 TIMOTHY RENSHAW
EXPIRES: 12/31/2024

NOTES:

1. SEE SHEET E-001 FOR GENERAL NOTES, LEGEND AND ABBREVIATIONS.
2. SEE SHEET E-509 FOR LIGHTING FIXTURE SCHEDULE.

KEYED NOTES:

1. DEMOLISH EXISTING POLE LIGHT
2. P.PNLH1.X. FED FROM OPERATIONS BUILDING.
3. P.LP1.21.1
4. P.LP1.20.1
5. P.LP1.23.1
6. P.LP1.25.1
7. P.LP1.24.1

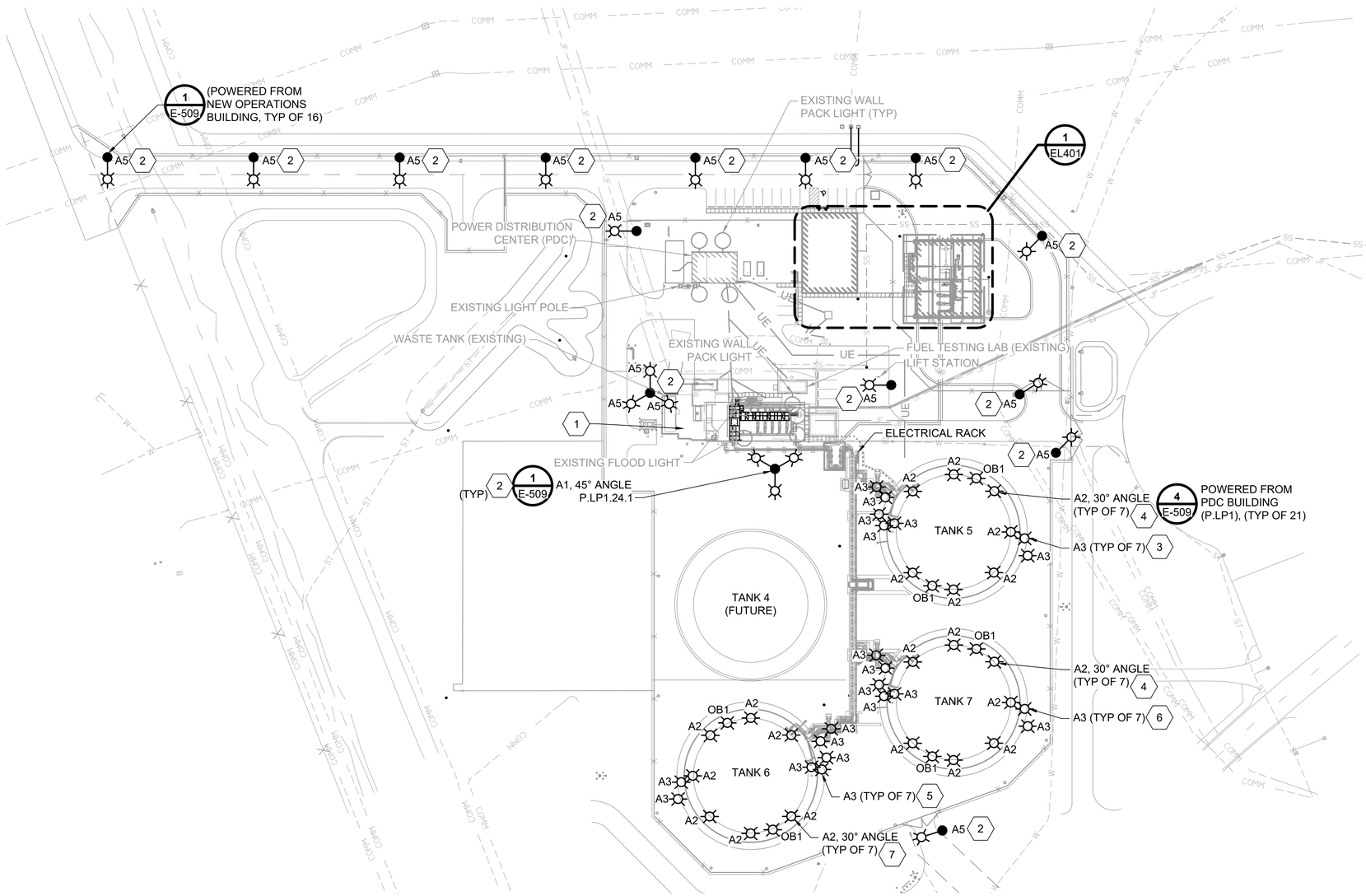

OVERALL LIGHTING PLAN

0 60' 120'
SCALE IN FEET

NORTH

no.	date	by	ckd	description
A	12/21/23	TSR	BAW	ISSUED FOR PERMIT

ISSUED FOR PERMIT ONLY

BURNS McDONNELL
9400 WARD PARKWAY
KANSAS CITY, MO 64114
816-333-9400
Burns & McDonnell Engineering Co, Inc.

date	detailed
04/24/2023	S. JESBERG
designed	checked
T. RENSHAW	B. WINTER

PDX FUEL COMPANY L.L.C

PORTLAND INTERNATIONAL AIRPORT
5000 NE MARINE DR.
PORTLAND, OREGON 97218

PDX FACILITY IMPROVEMENTS
OVERALL LIGHTING PLAN

12/20/2023

REGISTERED PROFESSIONAL ENGINEER 10008PE OREGON JULY 12, 2022 TIMOTHY RENSHAW
EXPIRES: 12/31/2024

project	contract
153929	
drawing	rev.
EL101	A

file 153929EL101.dwg

\\BMCD\DFS\CLIENTS\ANF\PORTLANDPORT\PDX\153929_FACILITYIMPRV\DESIGN\ELEC\SHEETS\153929EL101.DWG 12/19/2023 9:15 AM JLITTLE

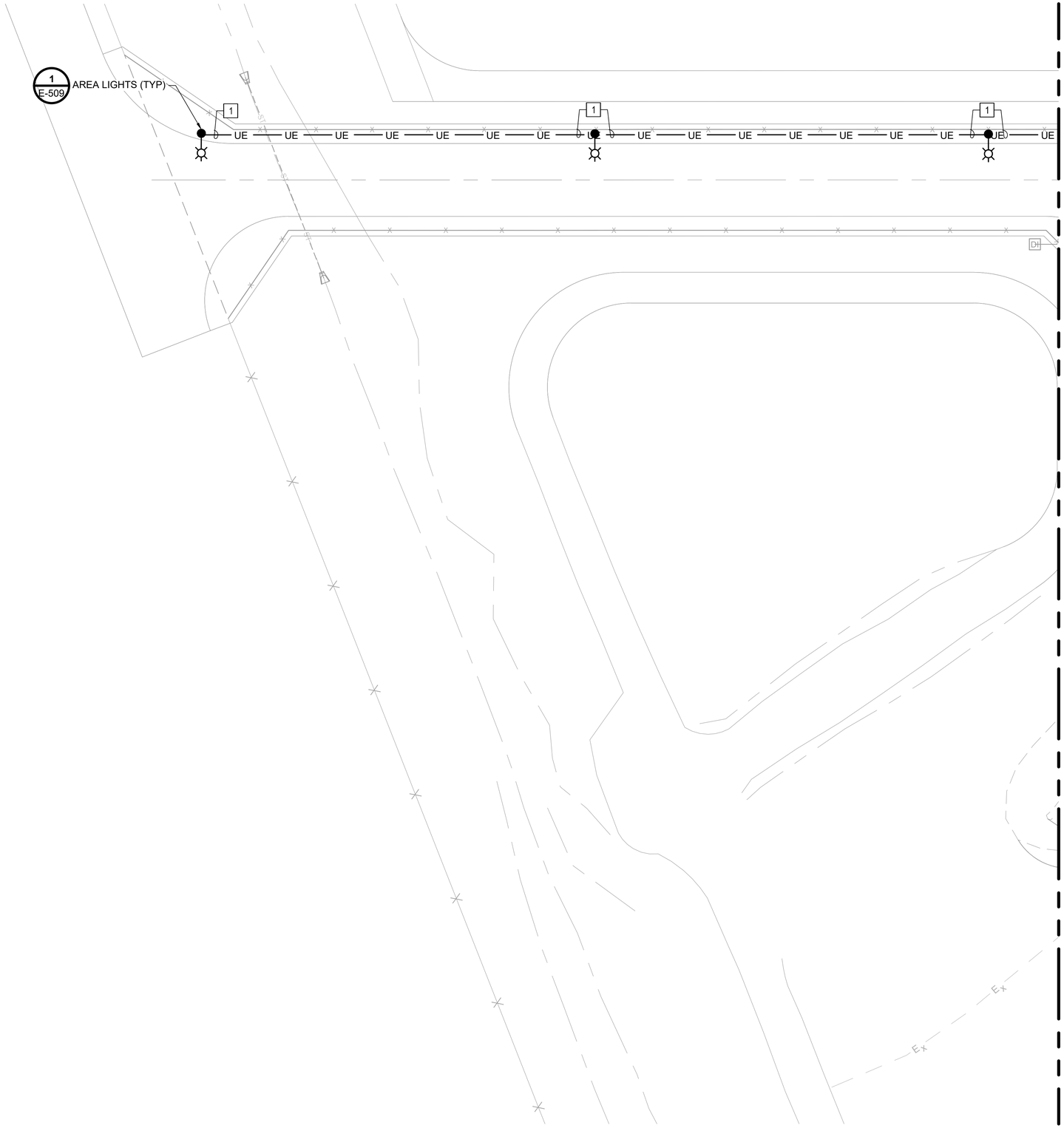

NOTES:

1. SEE SHEET E-001 FOR GENERAL NOTES, LEGEND AND ABBREVIATIONS.

CONDUIT SCHEDULE:

1. 2"C: (M1, N1) P.PNLH1.X. (FED FROM OPERATIONS BUILDING)

ELECTRICAL PLAN

0 10' 20' 40'
SCALE IN FEET

NORTH

12/20/2023

REGISTERED PROFESSIONAL ENGINEER
10006PE
OREGON
JANUARY 12, 2021
JIMOTHY RENSHAW
EXPIRES 12/31/2024

no.	date	by	ckd	description
A	12/21/23	TSR	BAW	ISSUED FOR PERMIT

KEYPLAN

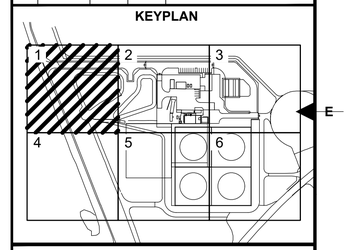

ISSUED FOR PERMIT ONLY

BURNS McDONNELL
9400 WARD PARKWAY
KANSAS CITY, MO 64114
816-333-9400
Burns & McDonnell Engineering Co, Inc.

date	detailed
04/24/2023	S. JESBERG
designed	checked
T. RENSHAW	B. WINTER

PDX FUEL COMPANY L.L.C

PORTLAND INTERNATIONAL AIRPORT
5000 NE MARINE DR.
PORTLAND, OREGON 97218

PDX FACILITY IMPROVEMENTS
ELECTRICAL PLAN

project	contract
153929	

drawing **E-102** rev. **A**

file 153929E-102.dwg

Millimeters
Scale For Microfilming
Inches

\\BMCD\DFS\CLIENTS\ANF\PORTLANDPORT\PDX\153929_FACILITYIMPRV\DESIGN\ELEC\SHEETS\153929E-102.DWG 12/19/2023 9:24 AM JLITTLE

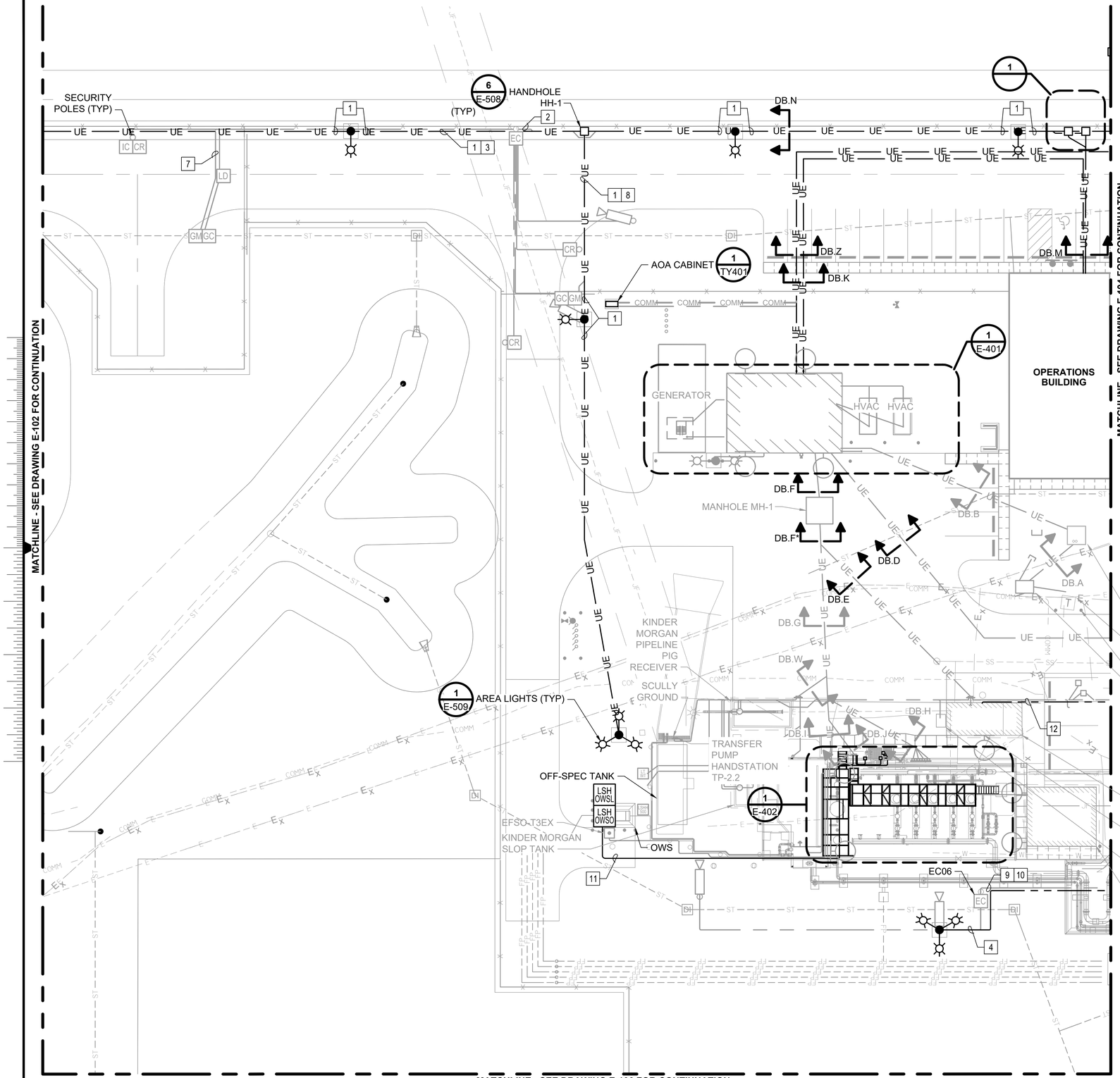

NOTES:

1. SEE SHEET E-001 FOR GENERAL NOTES, LEGEND AND ABBREVIATIONS.
2. CONDUIT ROUTING IS SCHEMATIC IN NATURE.
3. SEE SHEETS E-301 - E-305 FOR DUCTBANK SECTIONS.
4. SEE TS SERIES FOR COMMUNICATION AND TY SERIES FOR SECURITY. TS AND TY CONTENT IS SCREENED BACK FOR CLARITY.

CONDUIT SCHEDULE:

1. 2"C: (M1, N1) P.PNLH1.X. (FED FROM OPERATIONS BUILDING)
2. 2"C: (M2, N2) IC.OPS.EC01
3. 2"C: P.PA2.57 (FED FROM OPERATIONS BUILDING)
4. 2"C: P.PNLH1.X. FED FROM OPERATIONS BUILDING.
5. 2"C: (M5, N5) P.PA2.79 (FED FROM OPERATIONS BUILDING)
6. 2"C: (M3, N3) P.PA.69, P.PA.57 (FED FROM OPERATIONS BUILDING)
7. 2"C: (M4, N4) SPARE
8. 2"C: P.PA.69 (FED FROM OPERATIONS BUILDING)
9. 2"C: IC.OPS.EC06
10. 2"C: P.PA2.75(EC02, EC03,EC06)
11. 3/4"C: C.CSP.OWS
12. 2"C: P.P1.31, P.P1.32

KEYED NOTES:

1. FLOW METER TO BE SALVAGED

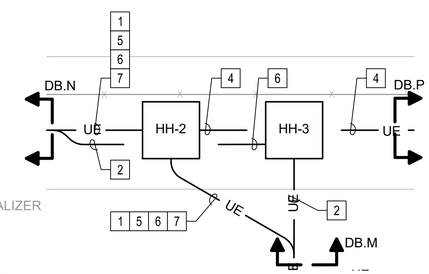

ENLARGED PLAN 1

ENLARGED PLAN HANDHOLES 2 & 3

0 3" 6" 9"
SCALE IN INCHES

NORTH

no.	date	by	ckd	description
A	12/21/23	TSR	BAW	ISSUED FOR PERMIT

KEYPLAN

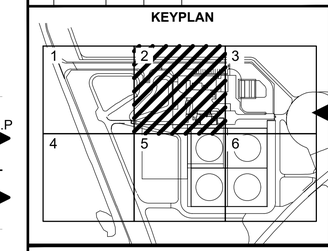

ISSUED FOR PERMIT ONLY

BURNS McDONNELL
9400 WARD PARKWAY
KANSAS CITY, MO 64114
816-333-9400
Burns & McDonnell Engineering Co, Inc.

date	detailed
04/24/2023	S. JESBERG
designed	checked
T. RENSHAW	B. WINTER

PDX FUEL COMPANY L.L.C

PORTLAND INTERNATIONAL AIRPORT
5000 NE MARINE DR.
PORTLAND, OREGON 97218

PDX FACILITY IMPROVEMENTS
ELECTRICAL PLAN

12/20/2023

REGISTERED PROFESSIONAL ENGINEER 100064PE OREGON JULY 13, 2022 TIMOTHY RENSHAW
EXPIRES: 12/31/2024

project	contract
153929	

drawing **E-103** rev. **A**

file 153929E-103.dwg

\\BMCD\DFS\CLIENTS\ANF\PORTLANDPORT\PDX\153929_FACILITYIMPRV\DESIGN\ELEC\SHEETS\153929E-103.DWG 12/19/2023 10:36 AM JLITTLE

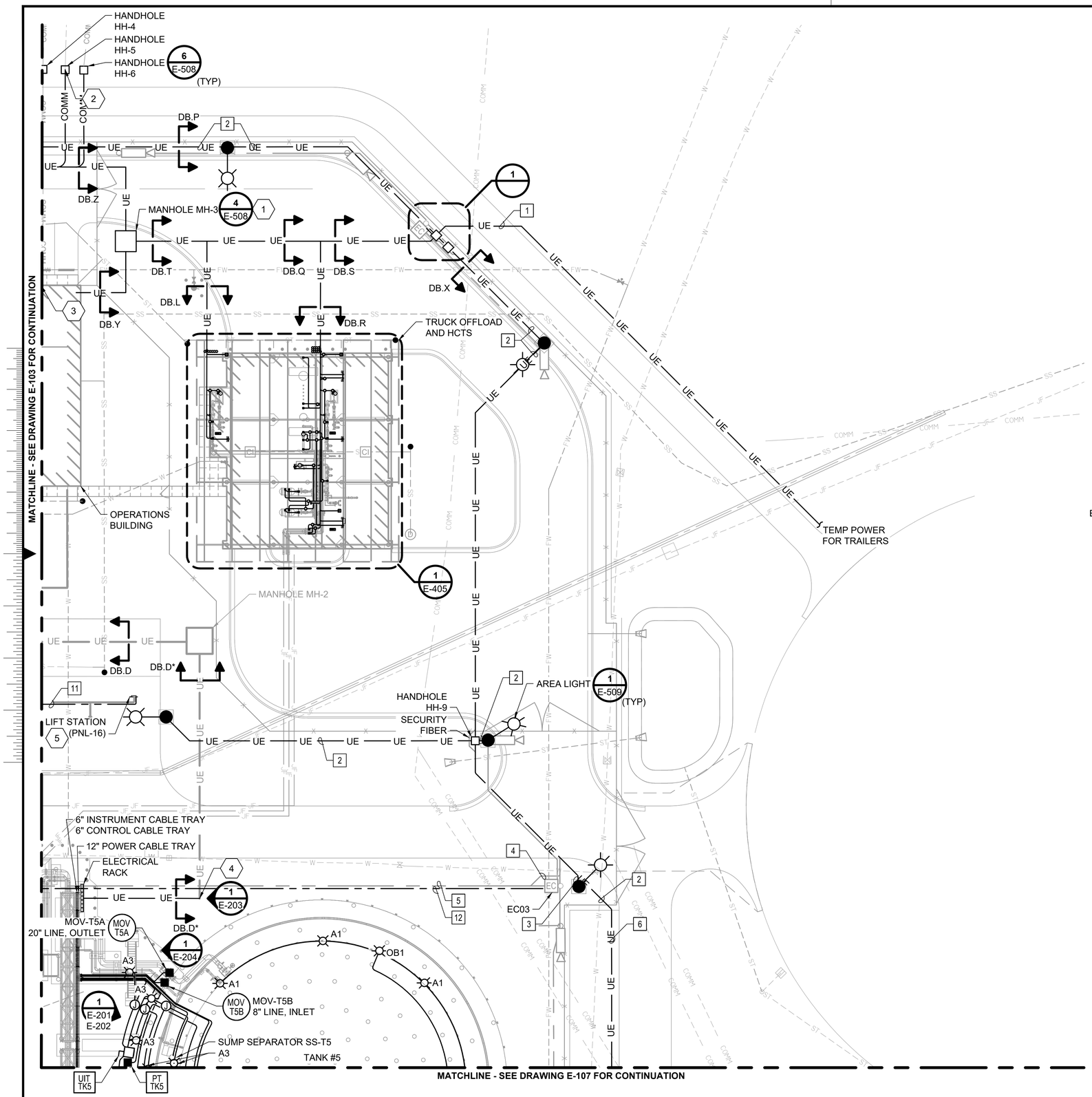

CONDUIT SCHEDULE:

1. 2"C: TEMP POWER FOR TRAILERS
2. 2"C: AREA LIGHTS
3. 2"C: IC.OPS.EC03, 2"C: P.PA2.75 (EC02,EC03,EC06)
4. 2"C: IC.OPS.EC06
5. 2"C:P.PA2.75(EC02,EC03,EC06) 2"C: IC.OPS.EC06
6. 2"C: AREA LIGHTS 2"C: IC.OPS.EC04, IC.OPS.EC05, 2"C: P.PA2.77 (EC04,EC05) (SEE OPERATIONS BUILDING PANEL SCHEDULE)
7. X"C: DIRECT BURIED SECURITY CONDUIT
8. 2"C: C.OPS.EC02, IC.OPS.EC03, IC.OPS.EC04, IC.OPS.EC05, IC.OPS.EC06
9. 2"C: (2)P.PA2.75
10. 2"C: IC.OPS.EC02
11. 2"C: P.P1.31, P.P1.32
12. 2"C: P.PNLH1.X. FED FROM OPERATIONS BUILDING.

NOTES:

1. SEE SHEET E-001 FOR GENERAL NOTES, LEGEND AND ABBREVIATIONS.
2. CONDUIT ROUTING IS SCHEMATIC IN NATURE.
3. SEE SHEETS E-301 - E-305 FOR DUCTBANK SECTIONS.
4. SEE TS SERIES FOR COMMUNICATION AND TY SERIES FOR SECURITY. CONTENT SCREENED BACK FOR CLARITY.

KEYED NOTE:

1. PROVIDE CONDUIT AND SEALS IN MANHOLE IN ACCORDANCE WITH THE NEC AND DETAIL 1 ON SHEET E-510.
2. SEE DETAIL 3 ON TS601 FOR MORE INFORMATION.
3. FIBER LINE TO BE ROUTED TO OPERATIONS BUILDING IT ROOM. COORDINATE WITH JH KELLY FOR FINAL LOCATION AND ROUTING.
4. INTERCEPT AND EXTEND DUCTBANK.
5. NEW LIFT STATION TO REPLACE EXISTING LIFT STATION. SEE CIVIL DRAWINGS FOR FURTHER DETAILS.

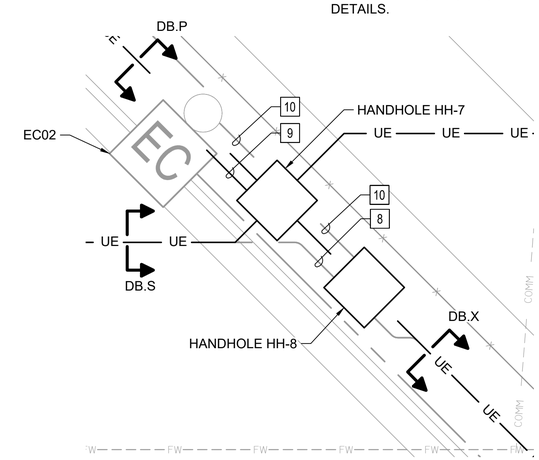

ENLARGED PLAN 1

ENLARGED PLAN HANDHOLES 7 & 8

0 3" 6" 9"
SCALE IN INCHES

NORTH

ELECTRICAL PLAN

0 10' 20' 40'
SCALE IN FEET

NORTH

12/20/2023

ENGINEERED PROFESSIONAL ENGINEER 10006PE OREGON JANUARY 12, 2023 TIMOTHY RENSHAW
EXPIRES: 12/31/2024

no.	date	by	ckd	description
A	12/21/23	TSR	BAW	ISSUED FOR PERMIT

KEYPLAN

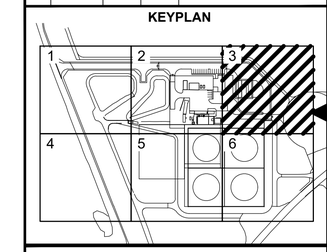

ISSUED FOR PERMIT ONLY

BURNS McDONNELL
9400 WARD PARKWAY
KANSAS CITY, MO 64114
816-333-9400
Burns & McDonnell Engineering Co, Inc.

date	detailed
04/24/2023	S. JESBERG
designed	checked
T. RENSHAW	B. WINTER

PDX FUEL COMPANY L.L.C

PORTLAND INTERNATIONAL AIRPORT
5000 NE MARINE DR.
PORTLAND, OREGON 97218

PDX FACILITY IMPROVEMENTS
ELECTRICAL PLAN

project	contract
153929	

drawing **E-104** rev. **A**

file 153929E-104.dwg

MATCHLINE - SEE DRAWING E-103 FOR CONTINUATION

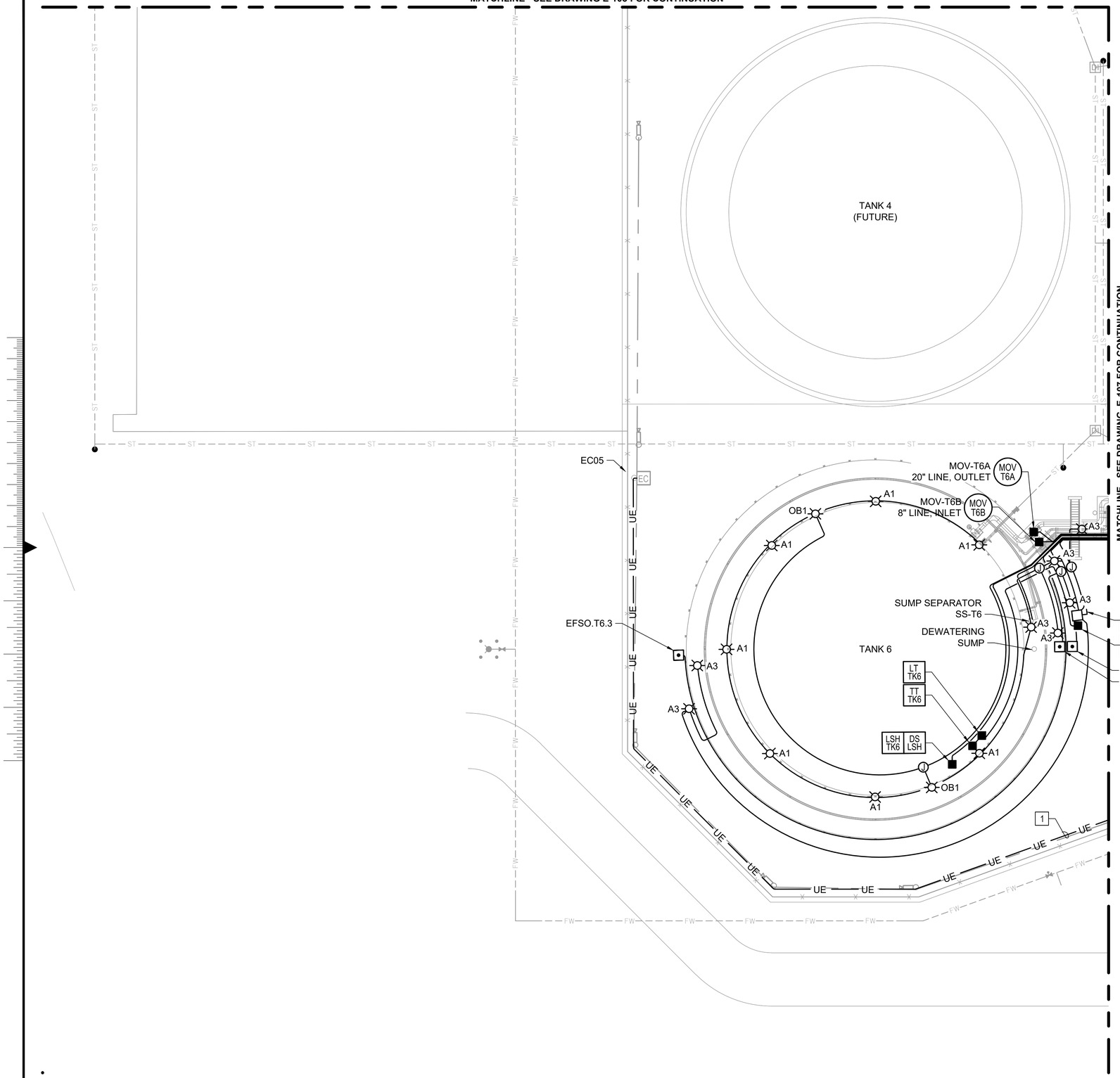

NOTES:

1. SEE SHEET E-001 FOR GENERAL NOTES, LEGEND AND ABBREVIATIONS.

CONDUIT SCHEDULE:

1. IC.OPS.EC05, 2"C: P.PA2.77 (EC04,EC05) (SEE OPERATIONS BUILDING PANEL SCHEDULE)

ELECTRICAL PLAN

0 10' 20' 40'
SCALE IN FEET

NORTH

12/20/2023

REGISTERED PROFESSIONAL ENGINEER 100084PE OREGON MAY 13, 2022 TIMOTHY RENSHAW
EXPIRES: 12/31/2024

no.	date	by	ckd	description
A	12/21/23	TSR	BAW	ISSUED FOR PERMIT

KEYPLAN

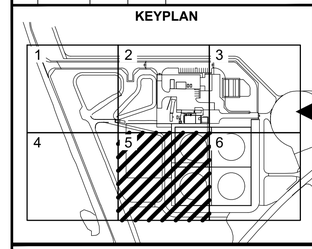

ISSUED FOR PERMIT ONLY

BURNS McDONNELL
9400 WARD PARKWAY
KANSAS CITY, MO 64114
816-333-9400
Burns & McDonnell Engineering Co, Inc.

date	detailed
04/24/2023	S. JESBERG
designed	checked
T. RENSHAW	B. WINTER

PDX FUEL COMPANY L.L.C

PORTLAND INTERNATIONAL AIRPORT
5000 NE MARINE DR.
PORTLAND, OREGON 97218

PDX FACILITY IMPROVEMENTS
ELECTRICAL PLAN

project	contract
153929	

drawing **E-106** rev. **A**

file 153929E-106.dwg

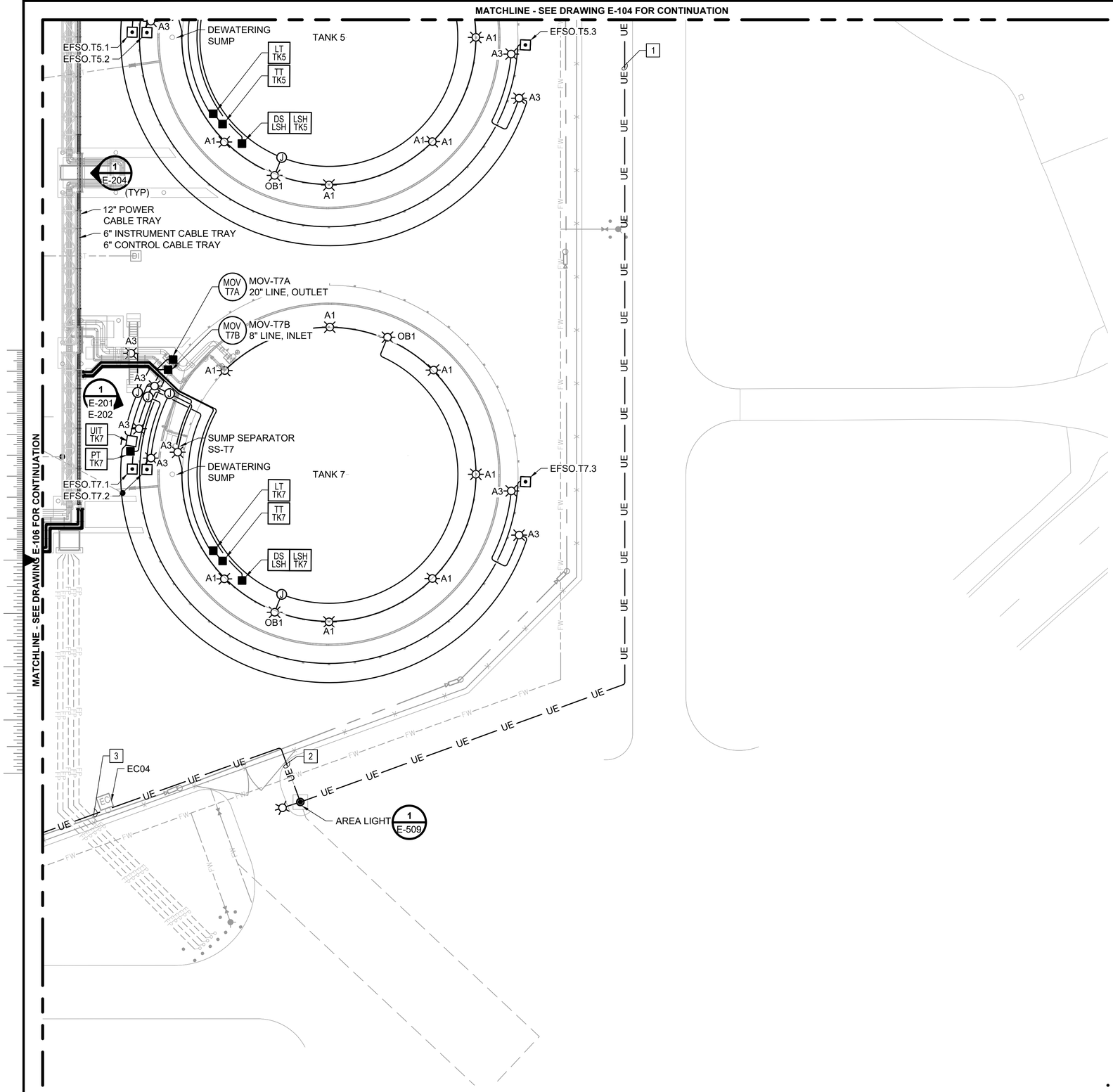

NOTE:

1. SEE SHEET E-001 FOR GENERAL NOTES, LEGEND AND ABBREVIATIONS.

CONDUIT SCHEDULE:

1. 2"C: AREA LIGHTS 2"C: IC.OPS.EC04, IC.OPS.EC05, 2"C: P.PA2.77 (EC04,EC05) (SEE OPERATIONS BUILDING PANEL SCHEDULE)
2. 2"C: IC.OPS.EC04, IC.OPS.EC05, 2"C: P.PA2.77 (EC04,EC05) (SEE OPERATIONS BUILDING PANEL SCHEDULE)
3. IC.OPS.EC05, 2"C: P.PA2.77 (EC04,EC05) (SEE OPERATIONS BUILDING PANEL SCHEDULE)

ELECTRICAL PLAN

0 10' 20' 40'
SCALE IN FEET

NORTH

12/20/2023

REGISTERED PROFESSIONAL ENGINEER 100084PE OREGON JULY 12, 2022 TIMOTHY RENSHAW
EXPIRES: 12/31/2024

no.	date	by	ckd	description
A	12/21/23	TSR	BAW	ISSUED FOR PERMIT

KEYPLAN

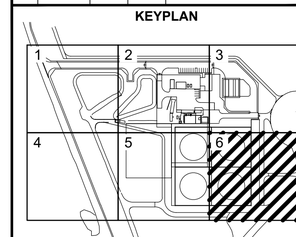

ISSUED FOR PERMIT ONLY

BURNS McDONNELL
9400 WARD PARKWAY
KANSAS CITY, MO 64114
816-333-9400
Burns & McDonnell Engineering Co, Inc.

date	detailed
04/24/2023	S. JESBERG
designed	checked
T. RENSHAW	B. WINTER

PDX FUEL COMPANY L.L.C

PORTLAND INTERNATIONAL AIRPORT
5000 NE MARINE DR.
PORTLAND, OREGON 97218

PDX FACILITY IMPROVEMENTS
ELECTRICAL PLAN

project	contract
153929	

drawing **E-107** rev. **A**

file 153929E-107.dwg

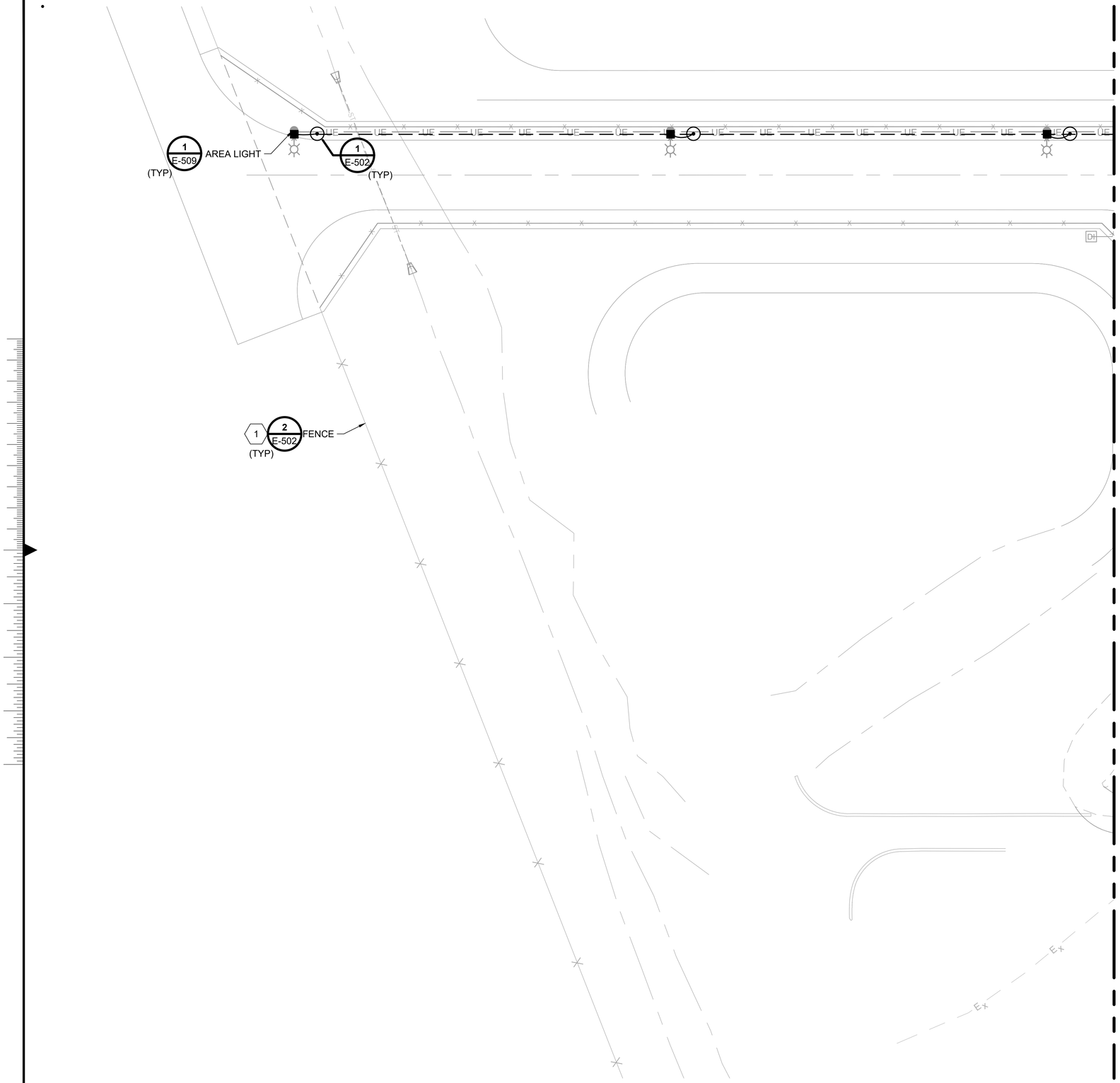

NOTES:

1. SEE SHEET E-001 FOR GENERAL NOTES, LEGEND AND ABBREVIATIONS.
2. PROVIDE FENCE GROUNDING PER DETAIL 2 ON DRAWING E-502 AT EACH GATE AND ALL CHANGES IN DIRECTION FOR ALL FENCING AND GATES SUPPLIED BY SUBCONTRACTOR.

KEYED NOTES:

1. PROVIDE FENCE GROUNDING. PROVIDE GROUNDING AT EACH GATE AND ALL CHANGES IN DIRECTION.

GROUNDING PLAN

0 10' 20' 40'
SCALE IN FEET

NORTH

12/20/2023

REGISTERED PROFESSIONAL ENGINEER 100064PE OREGON JANUARY 12, 2007 JONATHAN RENSHAW
EXPIRES: 12/31/2024

no.	date	by	ckd	description
A	12/21/23	TSR	BAW	ISSUED FOR PERMIT

KEYPLAN

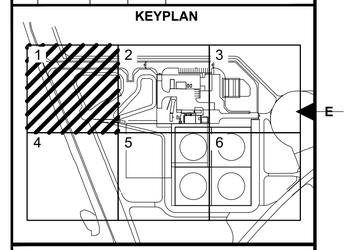

ISSUED FOR PERMIT ONLY

BURNS McDONNELL
9400 WARD PARKWAY
KANSAS CITY, MO 64114
816-333-9400
Burns & McDonnell Engineering Co, Inc.

date	detailed
04/24/2023	S. JESBERG
designed	checked
T. RENSHAW	B. WINTER

PDX FUEL COMPANY L.L.C

PORTLAND INTERNATIONAL AIRPORT
5000 NE MARINE DR.
PORTLAND, OREGON 97218

PDX FACILITY IMPROVEMENTS
GROUNDING PLAN

project	contract
153929	

drawing **EG102** rev. **A**

file 153929EG102.dwg

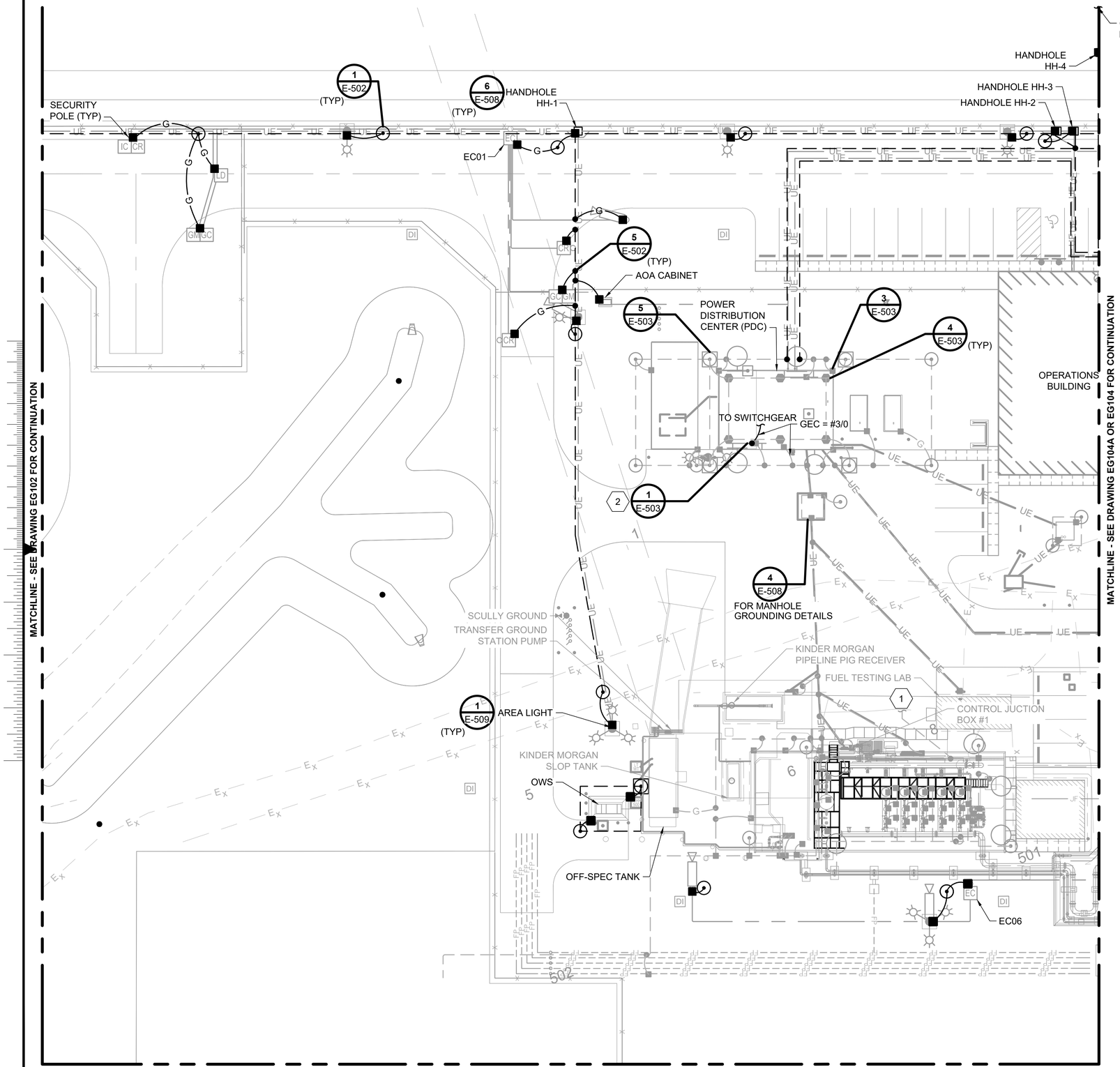

NOTES:

1. SEE SHEET E-001 FOR GENERAL NOTES, LEGEND AND ABBREVIATIONS.
2. PROVIDE FENCE GROUNDING PER DETAIL 2 ON DRAWING E-502 AT EACH GATE AND ALL CHANGES IN DIRECTION FOR ALL FENCING AND GATES SUPPLIED BY SUBCONTRACTOR.
3. LIGHTNING PROTECTION SYSTEM FOR THE POWER DISTRIBUTION CENTER PER NFPA 780, UL 96, UL 96A, AND SPECIFICATION 26 41 13.

KEYED NOTES:

1. GROUND GRID TO EXISTING GRID AT THE FENCE.

GROUNDING PLAN

0 10' 20' 40'
SCALE IN FEET

NORTH

12/20/2023

REGISTERED PROFESSIONAL ENGINEER 10006APE OREGON JULY 12, 2001 TIMOTHY RENSHAW
EXPIRES: 12/31/2024

no.	date	by	ckd	description
A	12/21/23	TSR	BAW	ISSUED FOR PERMIT

KEYPLAN

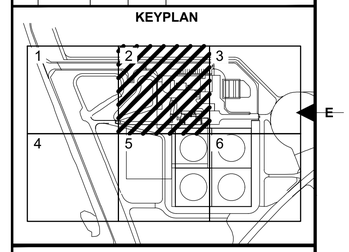

ISSUED FOR PERMIT ONLY

BURNS McDONNELL
9400 WARD PARKWAY
KANSAS CITY, MO 64114
816-333-9400
Burns & McDonnell Engineering Co, Inc.

date	detailed
04/24/2023	S. JESBERG
designed	checked
T. RENSHAW	B. WINTER

PDX FUEL COMPANY L.L.C

PORTLAND INTERNATIONAL AIRPORT
5000 NE MARINE DR.
PORTLAND, OREGON 97218

PDX FACILITY IMPROVEMENTS
GROUNDING PLAN

project	contract
153929	

drawing **EG103** rev. **A**

file 153929EG103.dwg

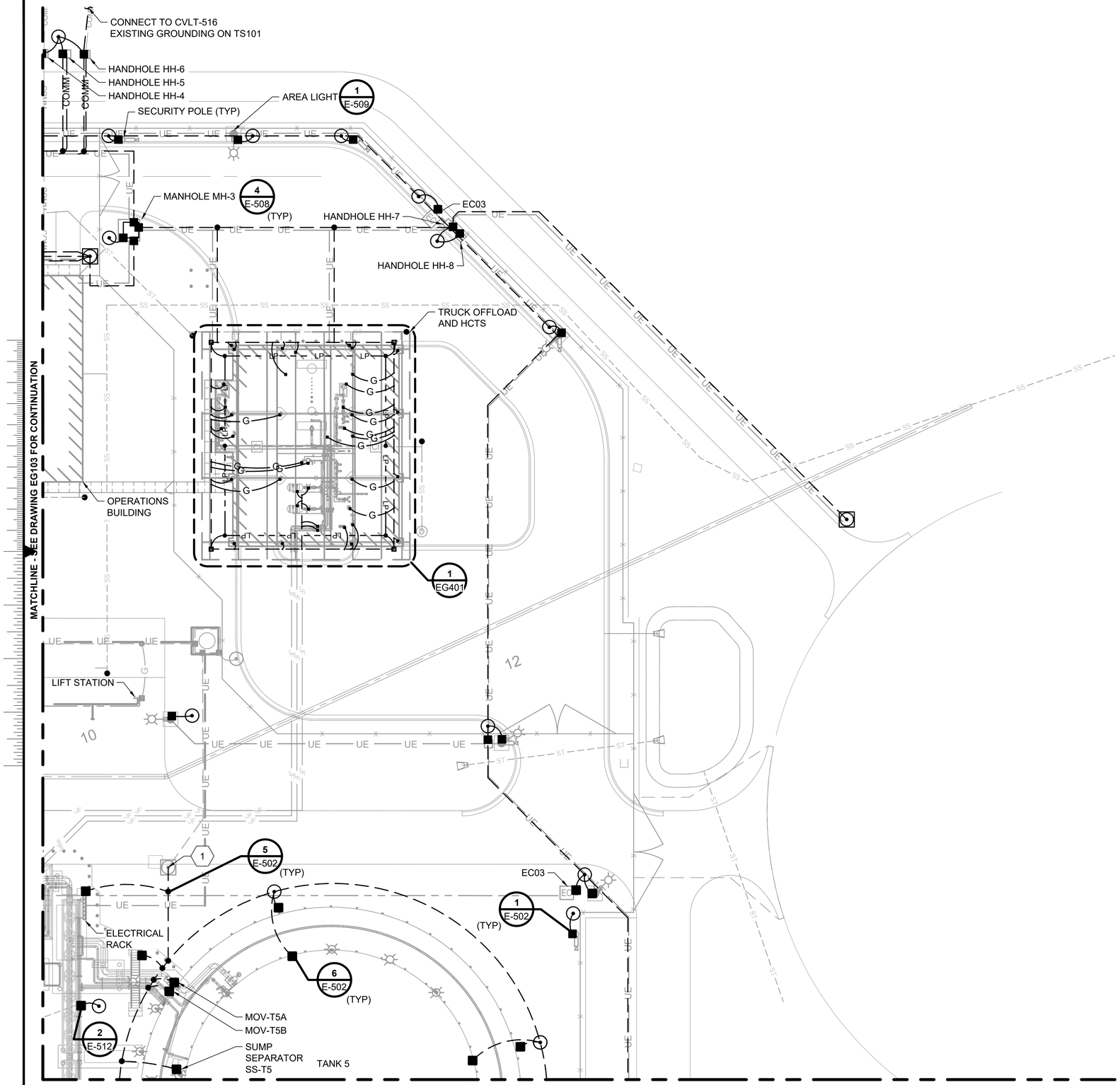

NOTES:

1. SEE SHEET E-001 FOR GENERAL NOTES, LEGEND AND ABBREVIATIONS.
2. PROVIDE FENCE GROUNDING PER DETAIL 2 ON DRAWING E-502 AT EACH GATE AND ALL CHANGES IN DIRECTION FOR ALL FENCING AND GATES SUPPLIED BY SUBCONTRACTOR.
3. PROVIDE LIGHTNING PROTECTION SYSTEM FOR THE OFFLOAD PUMP #2 AND HCTS CANOPY PER NFPA 780, UL 96, UL 96A, AND SPECIFICATION 26 41 13.

KEYED NOTES:

1. CONNECT TANK GROUNDING TO EXISTING GROUND GRID.

GROUNDING PLAN

0 10' 20' 40'
SCALE IN FEET

NORTH

12/20/2023

REGISTERED PROFESSIONAL ENGINEER 100064PE OREGON JULY 12, 2022 TIMOTHY RENSHAW
EXPIRES: 12/31/2024

no.	date	by	ckd	description
A	12/21/23	TSR	BAW	ISSUED FOR PERMIT

KEYPLAN

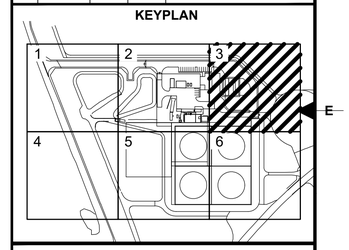

ISSUED FOR PERMIT ONLY

BURNS McDONNELL
9400 WARD PARKWAY
KANSAS CITY, MO 64114
816-333-9400
Burns & McDonnell Engineering Co, Inc.

date	detailed
04/24/2023	S. JESBERG
designed	checked
T. RENSHAW	B. WINTER

PDX FUEL COMPANY L.L.C

PORTLAND INTERNATIONAL AIRPORT
5000 NE MARINE DR.
PORTLAND, OREGON 97218

PDX FACILITY IMPROVEMENTS
GROUNDING PLAN

project	contract
153929	

drawing **EG104** rev. **A**

file 153929EG104.dwg

\\BMCD\DFS\CLIENTS\ANF\PORTLANDPORT\PDX\153929_FACILITYIMPRV\DESIGN\ELEC\SHEETS\153929EG104.DWG 12/19/2023 11:50 AM SNJESBERG

MATCHLINE - SEE DRAWING EG103 FOR CONTINUATION

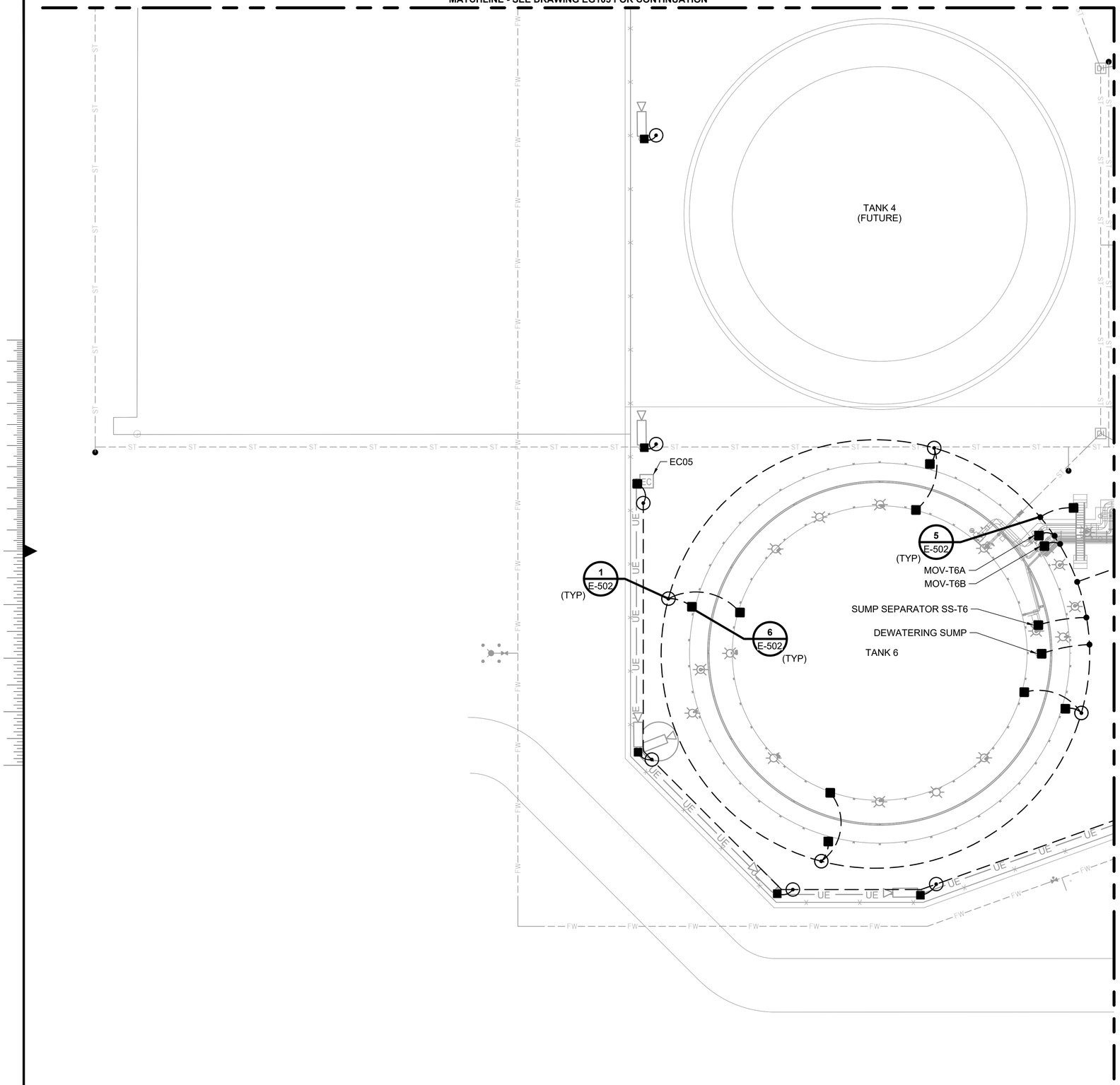

NOTES:

1. SEE SHEET E-001 FOR GENERAL NOTES, LEGEND AND ABBREVIATIONS.
2. PROVIDE FENCE GROUNDING PER DETAIL 2 ON DRAWING E-502 AT EACH GATE AND ALL CHANGES IN DIRECTION FOR ALL FENCING AND GATES SUPPLIED BY SUBCONTRACTOR.

GROUNDING PLAN

0 10' 20' 40'
SCALE IN FEET

NORTH

12/20/2023

REGISTERED PROFESSIONAL ENGINEER 100084PE OREGON JULY 13, 2022 TIMOTHY RENSHAW
EXPIRES: 12/31/2024

no.	date	by	ckd	description
A	12/21/23	TSR	BAW	ISSUED FOR PERMIT

KEYPLAN

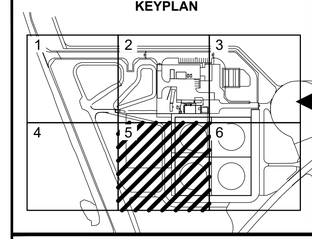

ISSUED FOR PERMIT ONLY

BURNS McDONNELL
9400 WARD PARKWAY
KANSAS CITY, MO 64114
816-333-9400
Burns & McDonnell Engineering Co, Inc.

date	detailed
04/24/2023	S. JESBERG
designed	checked
T. RENSHAW	B. WINTER

PDX FUEL COMPANY L.L.C

PORTLAND INTERNATIONAL AIRPORT
5000 NE MARINE DR.
PORTLAND, OREGON 97218

PDX FACILITY IMPROVEMENTS
GROUNDING PLAN

project	contract
153929	

drawing **EG106** rev. **A**

file 153929EG106.dwg

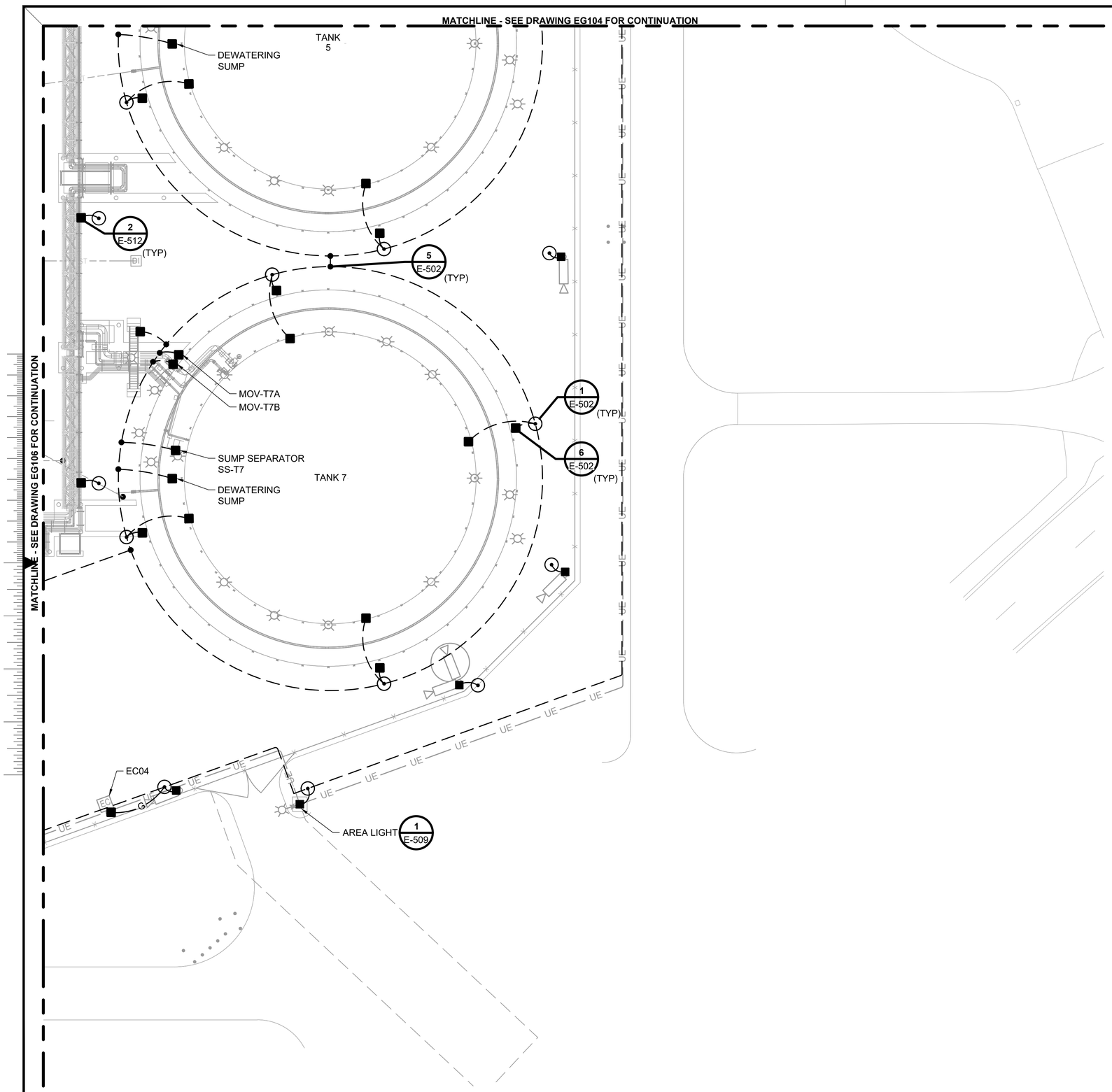

NOTES:

1. SEE SHEET E-001 FOR GENERAL NOTES, LEGEND AND ABBREVIATIONS.
2. PROVIDE FENCE GROUNDING PER DETAIL 2 ON DRAWING E-502 AT EACH GATE AND ALL CHANGES IN DIRECTION FOR ALL FENCING AND GATES SUPPLIED BY SUBCONTRACTOR.

no.	date	by	ckd	description
A	12/21/23	TSR	BAW	ISSUED FOR PERMIT

KEYPLAN

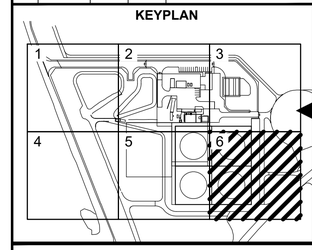

ISSUED FOR PERMIT ONLY

BURNS McDONNELL
9400 WARD PARKWAY
KANSAS CITY, MO 64114
816-333-9400
Burns & McDonnell Engineering Co, Inc.

date	detailed
04/24/2023	S. JESBERG
designed	checked
T. RENSHAW	B. WINTER

PDX FUEL COMPANY L.L.C

PORTLAND INTERNATIONAL AIRPORT
5000 NE MARINE DR.
PORTLAND, OREGON 97218

PDX FACILITY IMPROVEMENTS
GROUNDING PLAN

project	contract
153929	

drawing **EG107** rev. **A**

file 153929EG107.dwg

GROUNDING PLAN
0 10' 20' 40'
SCALE IN FEET

NORTH

12/20/2023

REGISTERED PROFESSIONAL ENGINEER 100084PE OREGON JULY 12, 2022 TIMOTHY RENSHAW
EXPIRES: 12/31/2024

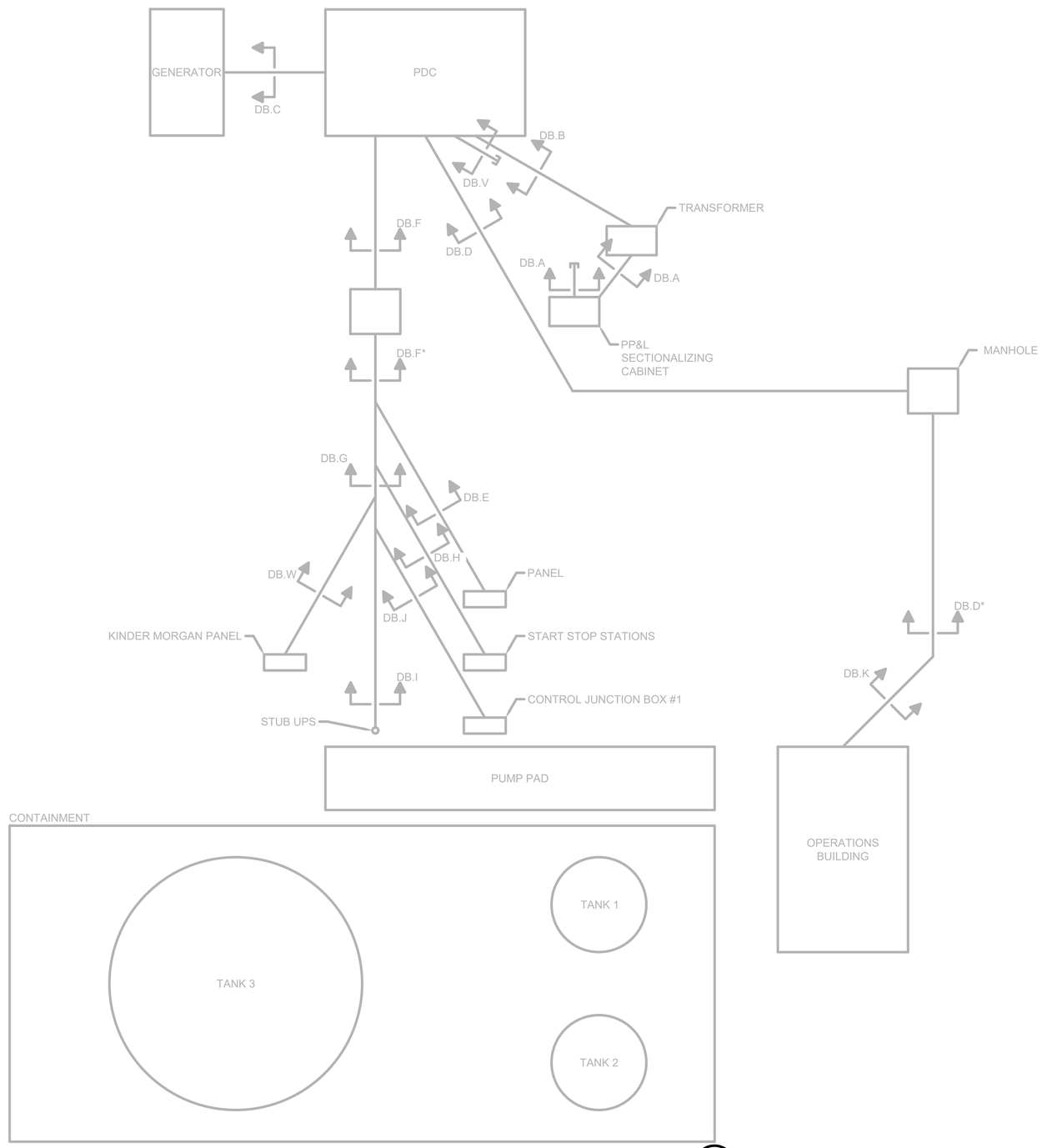

DETAIL 1
DUCTBANK RISER DIAGRAM - EXISTING -
NOT TO SCALE

no.	date	by	ckd	description
A	12/21/23	TSR	BAW	ISSUED FOR PERMIT

ISSUED FOR PERMIT ONLY

BURNS McDONNELL
9400 WARD PARKWAY
KANSAS CITY, MO 64114
816-333-9400
Burns & McDonnell Engineering Co, Inc.

date	detailed
04/24/2023	S. JESBERG
designed	checked
T. RENSHAW	B. WINTER

PDX FUEL COMPANY L.L.C

PORTLAND INTERNATIONAL AIRPORT
5000 NE MARINE DR.
PORTLAND, OREGON 97218

PDX FACILITY IMPROVEMENTS
DUCTBANK RISER DIAGRAM - EXISTING

project	contract
153929	

drawing	rev.
E-111A	**A**

file 153929E-111A.dwg

12/20/2023

REGISTERED PROFESSIONAL ENGINEER
100084PE
OREGON
JULY 12, 2022
TIMOTHY RENSHAW
EXPIRES: 12/31/2024

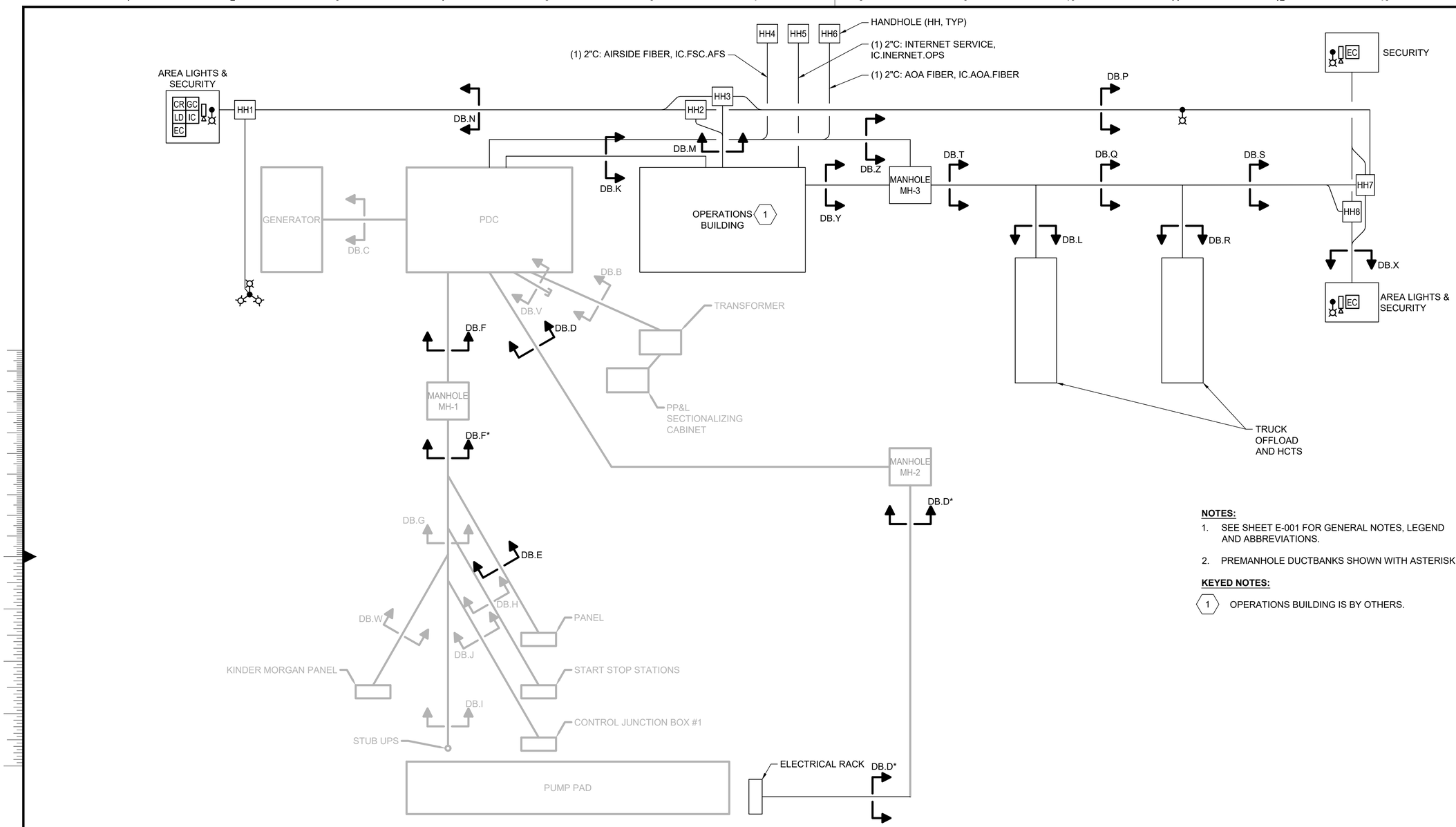

NOTES:

1. SEE SHEET E-001 FOR GENERAL NOTES, LEGEND AND ABBREVIATIONS.
2. PREMANHOLE DUCTBANKS SHOWN WITH ASTERISK.

KEYED NOTES:

1. OPERATIONS BUILDING IS BY OTHERS.

CONTAINMENT

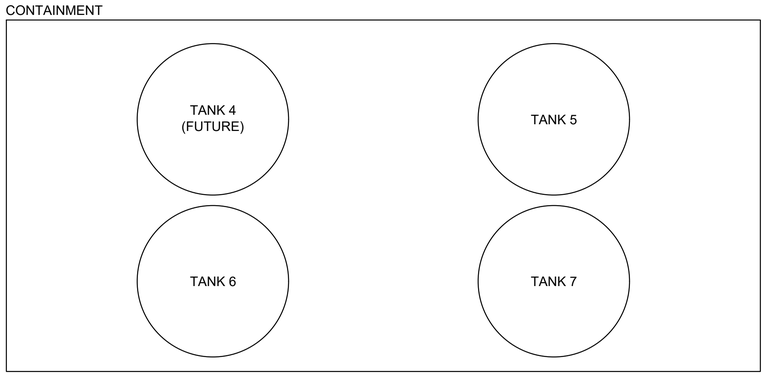

DETAIL 1 / -

DUCTBANK RISER DIAGRAM - FINAL

NOT TO SCALE

12/20/2023

REGISTERED PROFESSIONAL ENGINEER 100084PE OREGON JANUARY 12, 2021 TIMOTHY RENSHAW

EXPIRES: 12/31/2024

no.	date	by	ckd	description
A	12/21/23	TSR	BAW	ISSUED FOR PERMIT

ISSUED FOR PERMIT ONLY

BURNS McDONNELL
9400 WARD PARKWAY
KANSAS CITY, MO 64114
816-333-9400
Burns & McDonnell Engineering Co, Inc.

date	detailed
04/24/2023	S. JESBERG
designed	checked
T. RENSHAW	B. WINTER

PDX FUEL COMPANY L.L.C

PORTLAND INTERNATIONAL AIRPORT
5000 NE MARINE DR.
PORTLAND, OREGON 97218

PDX FACILITY IMPROVEMENTS

DUCTBANK RISER DIAGRAM - FINAL

project	contract
153929	

drawing	rev.
E-111B	A

file 153929E-111B.dwg

CORRESPONDING CIRCUIT NUMBERS			
CIRCUIT CALLOUT	TANK 5	TANK 6	TANK 7
1 SUMP MOTOR	P.PNL6.30	P.PNL6.31	P.PNL6.35
2 STAIR LIGHTS	P.LP1.21.1	P.LP1.23.1	P.LP1.25.1
3 OBSTRUCTION LIGHTS	P.LP1.32	P.LP1.34	P.LP1.36
4 AREA LIGHTS	P.LP1.20.1	P.LP1.24.1	P.LP1.20.1
5 MOV POWER	P.PNL5.32	P.PNL5.37	P.PNL5.38
6 MOV "A" CONTROLS	C.FSC.T5A	C.FSC.T6A	C.FSC.T7A
7 MOV "B" CONTROLS	C.FSC.T5B	C.FSC.T6B	C.FSC.T7B
8 UIT - POWER	P.UIT.T5	P.UIT.T6	P.UIT.T7
9 UIT - COMMUNICATION	IC.UIT.T5	IC.UIT.T6	IC.UIT.T7
10 PT COMMUNICATION	IC.PT.T5	IC.PT.T6	IC.PT.T7
11 LT COMMUNICATION	IS.LT.T5	IS.LT.T6	IS.LT.T7
12 TT COMMUNICATION	IS.TT.T5	IS.TT.T6	IS.TT.T7
13 LSHH	C.LS.T5	C.LS.T6	C.LS.T7
14 LSH-DW	C.DSLSH.T5	C.DSLSH.T6	C.DSLSH.T7
15 EFSO WEST STAIR	C.EFSO.T5W	C.EFSO.T6W	C.EFSO.T7W
16 EFSO EAST STAIR	C.EFSO.T5E	C.EFSO.T6E	C.EFSO.T7E
17 EFSO INSIDE STAIR	C.EFSO.T5I	C.EFSO.T6I	C.EFSO.T7I
18 MOV "A" - ESD	C.EFSO.T5A	C.EFSO.T6A	C.EFSO.T7A
19 MOV "B" - ESD	C.EFSO.T5B	C.EFSO.T6B	C.EFSO.T7B

NOTES:

1. SEE SHEET E-001 FOR LEGEND, ABBREVIATIONS, AND GENERAL NOTES.
2. SEE SHEET E-509 FOR LIGHT FIXTURE SCHEDULE.
3. LIGHTING TO BE PLACED AT BOTTOM, MIDDLE AND TOP OF STAIRS. TANK STAIRS TO BE DETERMINED BY SUBCONTRACTOR.
4. (*) ASTERIK MEANS THE WIRE IS DOWNSTREAM OF A SWITCH/DISCONNECT.

KEYED NOTES:

1. CONDUITS SHALL BE SUPPORTED UNDERNEATH STAIR PLATFORM AND CONTINUE UP TANK WALL TO INSTRUMENTS.

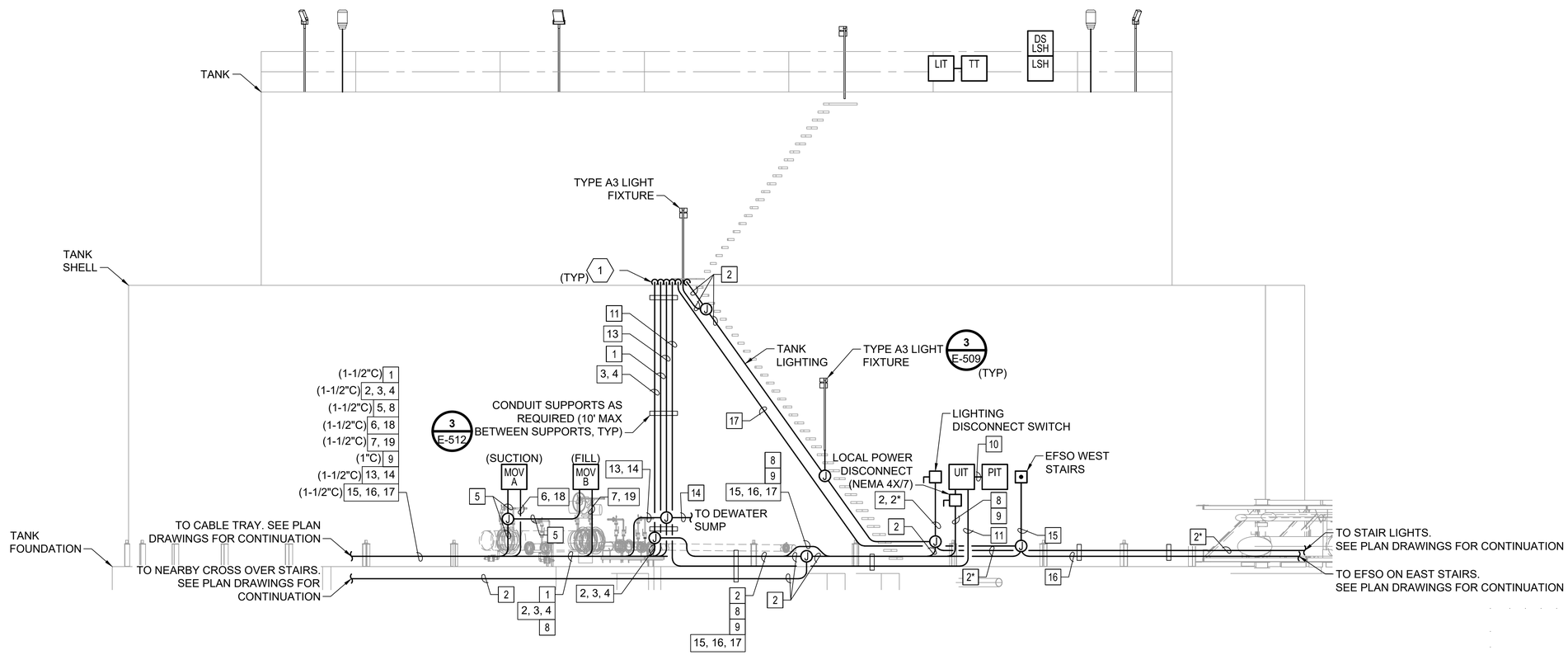

ELEVATION 1

TYPICAL TANK ELEVATION - OUTSIDE OF SHELL

E-104
E-106
E-107

0 4' 8' 12'
SCALE IN FEET

no.	date	by	ckd	description
A	12/21/23	TSR	BAW	ISSUED FOR PERMIT

ISSUED FOR PERMIT ONLY

BURNS McDONNELL
9400 WARD PARKWAY
KANSAS CITY, MO 64114
816-333-9400
Burns & McDonnell Engineering Co, Inc.

date	detailed
04/24/2023	S. JESBERG
designed	checked
T. RENSHAW	B. WINTER

PDX FUEL COMPANY L.L.C

PORTLAND INTERNATIONAL AIRPORT
5000 NE MARINE DR.
PORTLAND, OREGON 97218

PDX FACILITY IMPROVEMENTS

TYPICAL TANK ELEVATION - OUTSIDE OF SHELL

project	contract
153929	

drawing **E-201** rev. **A**

file 153929E-201.dwg

12/20/2023

REGISTERED PROFESSIONAL ENGINEER 100084PE OREGON JULY 13, 2022 TIMOTHY RENSHAW
EXPIRES: 12/31/2024

CORRESPONDING CIRCUIT NUMBERS			
CIRCUIT CALLOUT	TANK 5	TANK 6	TANK 7
1 SUMP MOTOR	P.PNL6.30	P.PNL6.31	P.PNL6.35
2 STAIR LIGHTS	P.LP1.21.1	P.LP1.23.1	P.LP1.25.1
3 OBSTRUCTION LIGHTS	P.LP1.32	P.LP1.34	P.LP1.36
4 AREA LIGHTS	P.LP1.20.1	P.LP1.24.1	P.LP1.20.1
5 MOV POWER	P.PNL5.32	P.PNL5.37	P.PNL5.38
6 MOV "A" CONTROLS	C.FSC.T5A	C.FSC.T6A	C.FSC.T7A
7 MOV "B" CONTROLS	C.FSC.T5B	C.FSC.T6B	C.FSC.T7B
8 UIT - POWER	P.UIT.T5	P.UIT.T6	P.UIT.T7
9 UIT - COMMUNICATION	IC.UIT.T5	IC.UIT.T6	IC.UIT.T7
10 PT COMMUNICATION	IC.PT.T5	IC.PT.T6	IC.PT.T7
11 LT COMMUNICATION	IS.LT.T5	IS.LT.T6	IS.LT.T7
12 TT COMMUNICATION	IS.TT.T5	IS.TT.T6	IS.TT.T7
13 LSHH	C.LS.T5	C.LS.T6	C.LS.T7
14 LSH-DW	C.DSLSH.T5	C.DSLSH.T6	C.DSLSH.T7
15 EFSO WEST STAIR	C.EFSO.T5W	C.EFSO.T6W	C.EFSO.T7W
16 EFSO EAST STAIR	C.EFSO.T5E	C.EFSO.T6E	C.EFSO.T7E
17 EFSO INSIDE STAIR	C.EFSO.T5I	C.EFSO.T6I	C.EFSO.T7I
18 MOV "A" - ESD	C.EFSO.T5A	C.EFSO.T6A	C.EFSO.T7A
19 MOV "B" - ESD	C.EFSO.T5B	C.EFSO.T6B	C.EFSO.T7B

NOTES:

1. SEE SHEET E-001 FOR LEGEND, ABBREVIATIONS, AND GENERAL NOTES.
2. SEE SHEET E-509 FOR LIGHT FIXTURE SCHEDULE.
3. LIGHTING TO BE PLACED AT BOTTOM, MIDDLE AND TOP OF STAIRS. TANK STAIRS TO BE DETERMINED BY SUBCONTRACTOR.
4. (*) ASTERIK MEANS THE WIRE IS DOWNSTREAM OF A SWITCH/DISCONNECT.

KEYED NOTES:

1. CONDUITS SHALL BE SUPPORTED UNDERNEATH STAIR PLATFORM AND CONTINUE UP TANK WALL TO INSTRUMENTS.

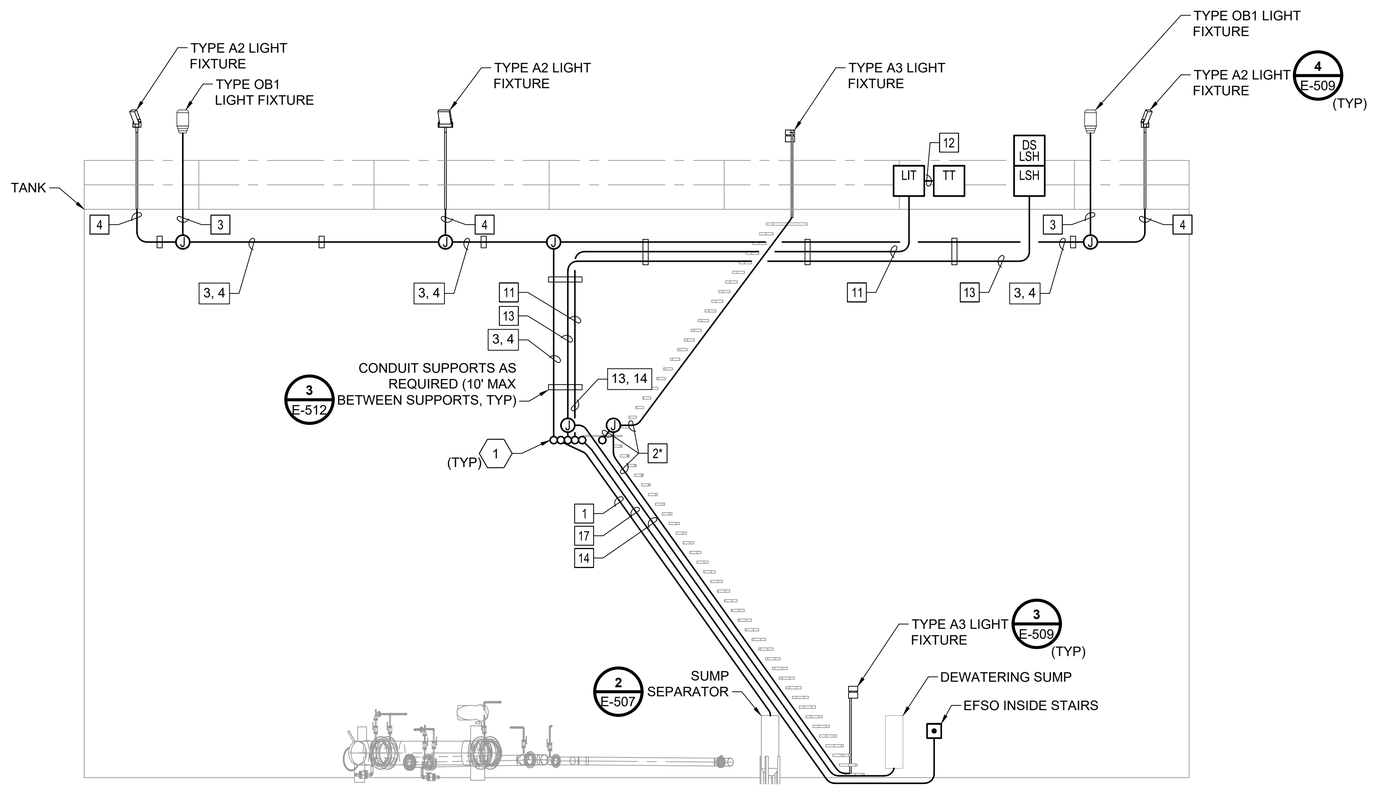

ELEVATION 1 E-104 E-106 E-107

TYPICAL TANK ELEVATION - INSIDE OF SHELL

0 4' 8' 12'
SCALE IN FEET

no.	date	by	ckd	description
A	12/21/23	TSR	BAW	ISSUED FOR PERMIT

ISSUED FOR PERMIT ONLY

BURNS McDONNELL
9400 WARD PARKWAY
KANSAS CITY, MO 64114
816-333-9400
Burns & McDonnell Engineering Co, Inc.

date	detailed
04/24/2023	S. JESBERG
designed	checked
T. RENSHAW	B. WINTER

PDX FUEL COMPANY L.L.C

PORTLAND INTERNATIONAL AIRPORT
5000 NE MARINE DR.
PORTLAND, OREGON 97218

PDX FACILITY IMPROVEMENTS
TYPICAL TANK ELEVATION - INSIDE OF SHELL

project	contract
153929	

drawing **E-202** rev. **A**

file 153929E-202.dwg

12/20/2023

REGISTERED PROFESSIONAL ENGINEER 100084PE OREGON JANUARY 12, 2021 TIMOTHY RENSHAW
EXPIRES 12/31/2024

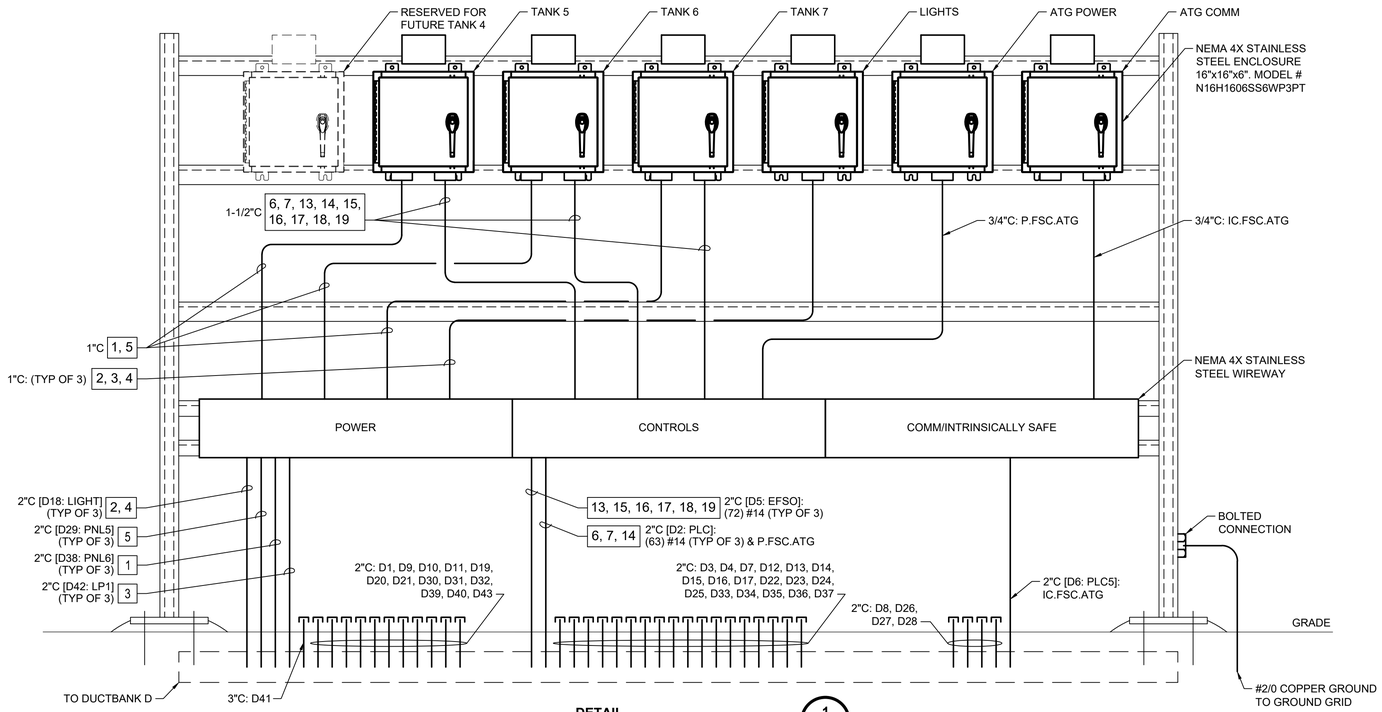

DETAIL 1 / E-104
ELECTRICAL RACK SECTION
NOT TO SCALE

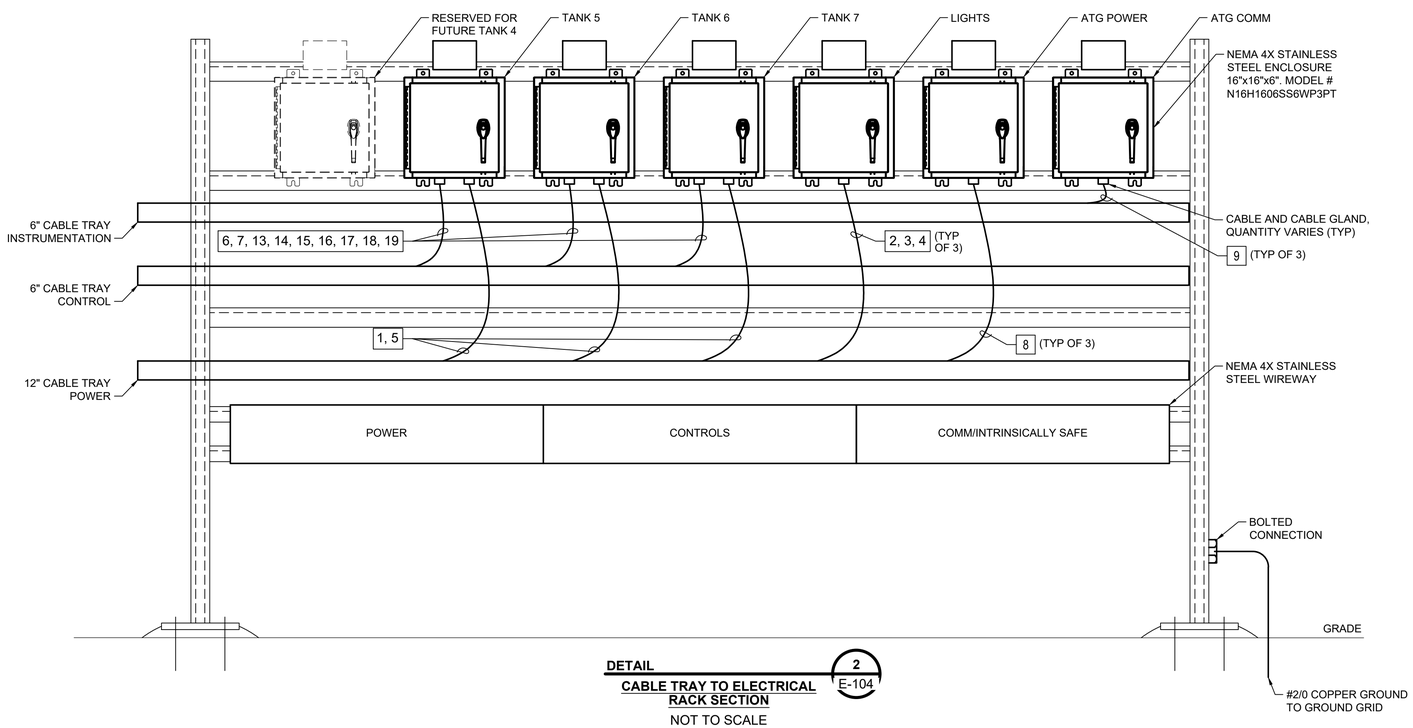

DETAIL 2 / E-104
CABLE TRAY TO ELECTRICAL RACK SECTION
NOT TO SCALE

NOTES:

1. SEE SHEET E-001 FOR GENERAL NOTES, LEGEND AND ABBREVIATIONS.
2. SEE CORRESPONDING CIRCUIT NUMBER SCHEDULE ON SHEET E-201 FOR CIRCUIT LABELS.

no.	date	by	ckd	description
A	12/21/23	TSR	BAW	ISSUED FOR PERMIT

ISSUED FOR PERMIT ONLY

BURNS McDONNELL
9400 WARD PARKWAY
KANSAS CITY, MO 64114
816-333-9400
Burns & McDonnell Engineering Co, Inc.

date	detailed
04/24/2023	S. JESBERG
designed	checked
T. RENSHAW	B. WINTER

PDX FUEL COMPANY L.L.C

PORTLAND INTERNATIONAL AIRPORT
5000 NE MARINE DR.
PORTLAND, OREGON 97218

PDX FACILITY IMPROVEMENTS
CABLE TRAY ELECTRICAL RACK ELEVATION

project	contract
153929	

drawing **E-203** rev. **A**

file 153929E-203.dwg

12/20/2023

REGISTERED PROFESSIONAL ENGINEER 100084PE OREGON MAY 12, 2023 TIMOTHY RENSHAW
EXPIRES: 12/31/2024

NOTES:

1. SEE SHEET E-001 FOR LEGEND, ABBREVIATIONS, AND GENERAL NOTES.
2. NOT ALL SECONDARY SUPPORTS REQUIRED ARE SHOW. PROVIDE ALL C-CHANNEL, CLAMPS AND OTHER APPURTENANCES AS REQUIRED TO SUPPORT CABLE TRAY AS SPECIFIED. ALL CABLE TRAY SHALL BE SUPPORTED PER NEMA VE-2 AND MANUFACTURER REQUIREMENTS.

KEYED NOTES:

1. PROVIDE #4 BONDING JUMPER BETWEEN ALL DISCONTINUOUS SECTIONS OF CABLE TRAY.

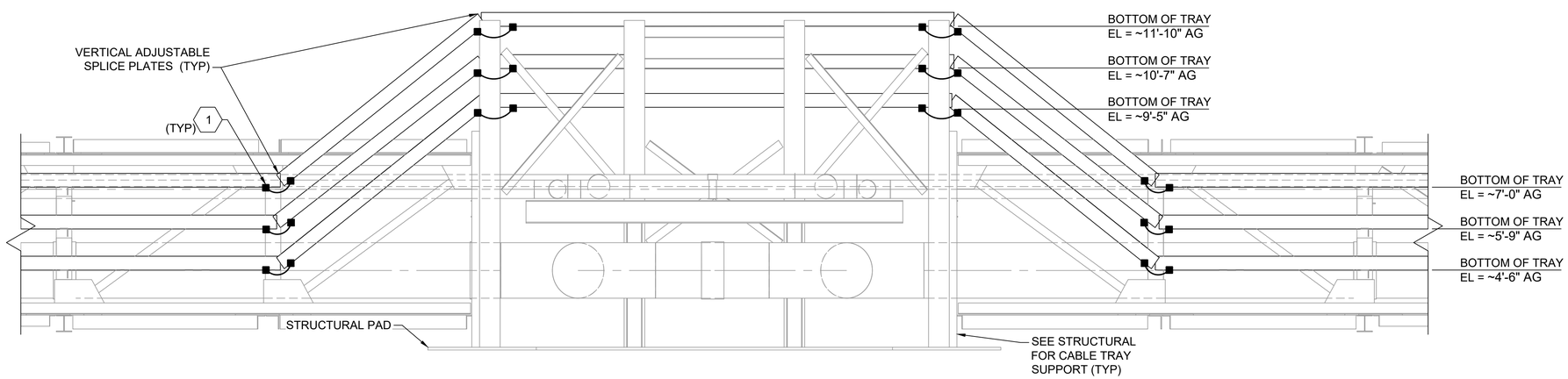

ELEVATION 1
TYPICAL CABLE TRAY ELEVATION E-104 E-107

no.	date	by	ckd	description
A	12/21/23	TSR	BAW	ISSUED FOR PERMIT

ISSUED FOR PERMIT ONLY

BURNS McDONNELL
9400 WARD PARKWAY
KANSAS CITY, MO 64114
816-333-9400
Burns & McDonnell Engineering Co, Inc.

date	detailed
04/24/2023	S. JESBERG
designed	checked
T. RENSHAW	B. WINTER

PDX FUEL COMPANY L.L.C

PORTLAND INTERNATIONAL AIRPORT
5000 NE MARINE DR.
PORTLAND, OREGON 97218

PDX FACILITY IMPROVEMENTS
TYPICAL CABLE TRAY ELEVATION

12/20/2023

REGISTERED PROFESSIONAL ENGINEER 100084PE OREGON JULY 12, 2022 TIMOTHY RENSHAW
EXPIRES: 12/31/2024

project	contract
153929	

drawing **E-204** rev. **A**

file 153929E-204.dwg

NOTES:

1. SEE SHEET E-001 FOR GENERAL NOTES, LEGEND AND ABBREVIATIONS.
2. PREMANHOLE DUCTBANKS SHOWN WITH ASTERISK.

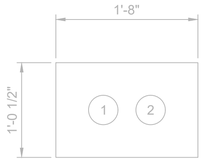

CONDUIT SCHEDULE	
ID	DESCRIPTION
A1	4"C: (BY UTILITY)
A2	4"C: (BY UTILITY)

SECTION A — E-103, E-111A, E-111B

NOT TO SCALE

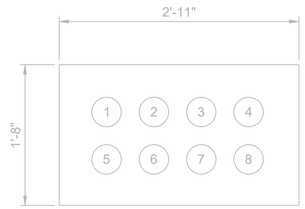

CONDUIT SCHEDULE	
ID	DESCRIPTION
B1	4"C: (BY KINDER MORGAN)
B2	4"C: P.XFMR.SWGR1
B3	4"C: P.XFMR.SWGR1
B4	4"C: P.XFMR.SWGR1
B5	4"C: (BY KINDER MORGAN)
B6	4"C: P.XFMR.SWGR1
B7	4"C: P.XFMR.SWGR1
B8	4"C: SPARE

SECTION B — E-103, E-111A, E-111B, E-401, E-404

NOT TO SCALE

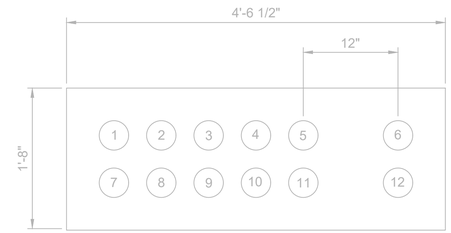

CONDUIT SCHEDULE	
ID	DESCRIPTION
C1	4"C: SPARE
C2	4"C: P.GEN.ATS1
C3	4"C: P.GEN.ATS1
C4	4"C: P.GEN.ATS1
C5	4"C: P.GEN.ATS1
C6	2"C: C.ATS1.GEN, C.ATS2.GEN, C.FSC.GEN, C.EPO.GEN
C7	4"C: SPARE
C8	4"C: P.GEN.ATS2
C9	4"C: P.GEN.ATS2
C10	4"C: P.GEN.ATS2
C11	4"C: P.GEN.ATS2
C12	2"C: IC.GEN.RGAP

SECTION C — E-103, E-111A, E-111B, E-401

NOT TO SCALE

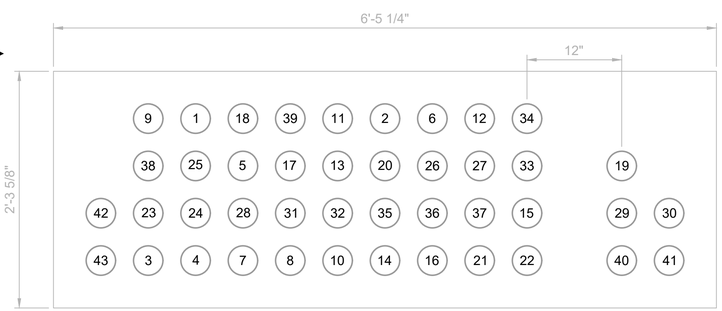

SECTION VIEW D - POST MANHOLE

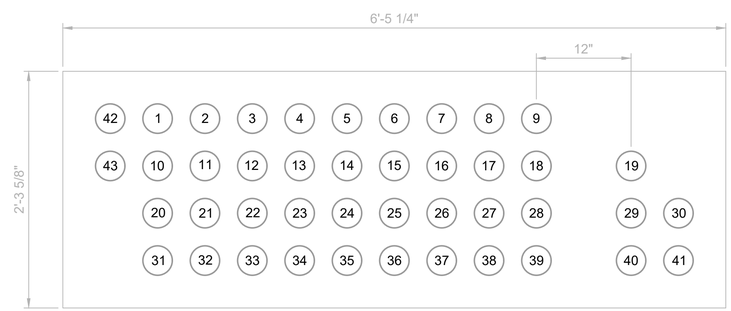

SECTION VIEW D* - PRE MANHOLE

CONDUIT SCHEDULE	
ID	DESCRIPTION
D1	2"C: SPARE
D2	2"C: C.FSC.T5A, C.FSC.T6A, C.FSC.T7A, C.FSC.T5B, C.FSC.T6B, C.FSC.T7B, C.DSLSH.T5, C.DSLSH.T6, C.DSLSH.T7, P.FSC.ATG
D3	2"C: SPARE
D4	2"C: SPARE
D5	2"C: C.LS.T5, C.LS.T6, C.LS.T7, C.EFSO.T5W, C.EFSO.T6W, C.EFSO.T7W, C.EFSO.T5E, C.EFSO.T6E, C.EFSO.T7E, C.EFSOT5I, C.EFSO.T6I, C.EFSO.T7I, C.EFSO.T5A, C.EFSO.T6A, C.EFSO.T7A, C.EFSO.T5B, C.EFSO.T6B, C.EFSO.T7B
D6	2"C: IC.FSC.ATG
D7	2"C: SPARE
D8	2"C: SPARE
D9	2"C: SPARE
D10	2"C: SPARE
D11	2"C: SPARE
D12	2"C: SPARE

D13	2"C: SPARE
D14	2"C: SPARE
D15	2"C: SPARE
D16	2"C: SPARE
D17	2"C: SPARE
D18	2"C: P.LP1.21.1, P.LP1.23.1, P.LP1.25.1 P.LP1.20.1, P.LP1.24.1, P.LP1.20.1
D19	2"C: SPARE
D20	2"C: SPARE
D21	2"C: SPARE
D22	2"C: SPARE
D23	2"C: SPARE
D24	2"C: SPARE
D25	2"C: SPARE
D26	2"C: SPARE
D27	2"C: SPARE
D28	2"C: SPARE

D29	2"C: P.PNL5.32, P.PNL5.37, P.PNL5.38
D30	2"C: SPARE
D31	2"C: SPARE
D32	2"C: SPARE
D33	2"C: SPARE
D34	2"C: SPARE
D35	2"C: SPARE
D36	2"C: SPARE
D37	2"C: SPARE
D38	2"C: P.PNL6.30, P.PNL6.31, P.PNL6.35
D39	2"C: SPARE
D40	2"C: SPARE
D41	3"C: SPARE
D42	2"C: P.LP1.32, P.LP1.34, P.LP1.36
D43	2"C: SPARE

SECTION D — E-103, E-104A E-104, E-111A E-111B, E-401 E-404

NOT TO SCALE

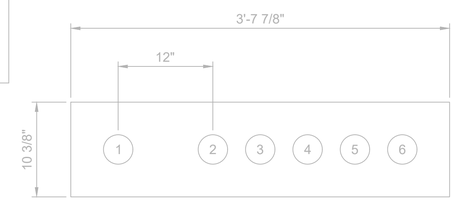

CONDUIT SCHEDULE	
ID	DESCRIPTION
E1	2"C:P.MCC1.PP1, C.HS.TP2.2
E2	2"C: IC.FSC.TEMP - NOT IN USE, I.LT.WT
E3	2"C: IC.FSC.AFS
E4	2"C: C.LSH.500, C.FSC.SG, C.FSC.SLTLSHH, C.FSC.SLTLA, C.FSC.LABLSH, C.FSC.KM - NOT IN USE, C.EFSO.AIRSIDE - NOT IN USE
E5	2"C: SPARE
E6	2"C: SPARE

SECTION E — E-103, E-111A, E-111B

NOT TO SCALE

12/20/2023

REGISTERED PROFESSIONAL ENGINEER 100064PE OREGON JULY 12, 2022 TIMOTHY RENSHAW

EXPIRES: 12/31/2024

no.	date	by	ckd	description
A	12/21/23	TSR	BAW	ISSUED FOR PERMIT

ISSUED FOR PERMIT ONLY

BURNS McDONNELL
9400 WARD PARKWAY
KANSAS CITY, MO 64114
816-333-9400
Burns & McDonnell Engineering Co, Inc.

date	detailed
04/24/2023	S. JESBERG
designed	checked
T. RENSHAW	B. WINTER

PDX FUEL COMPANY L.L.C

PORTLAND INTERNATIONAL AIRPORT
5000 NE MARINE DR.
PORTLAND, OREGON 97218

PDX FACILITY IMPROVEMENTS
DUCTBANK SECTIONS - 1

project	contract
153929	

drawing **E-301** rev. **A**

file 153929E-301.dwg

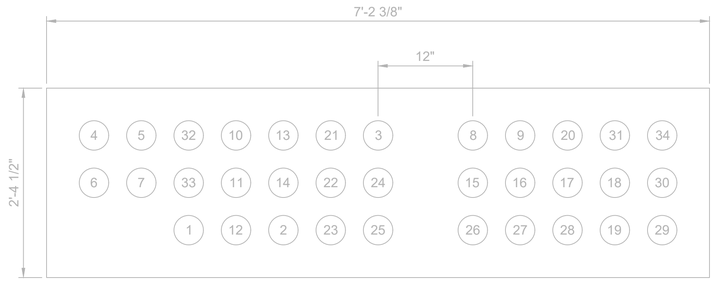

SECTION VIEW F* - PRE MANHOLE

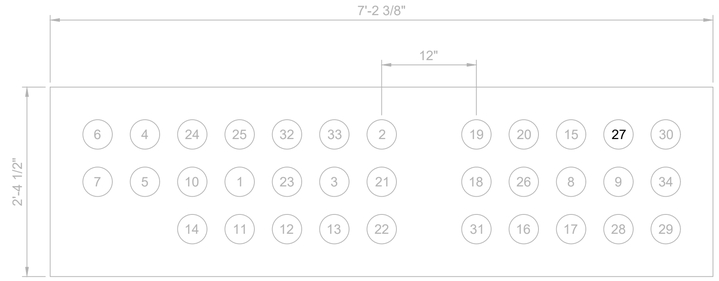

SECTION VIEW F - POST MANHOLE

NOTE:

1. SEE SHEET E-001 FOR GENERAL NOTES, LEGEND AND ABBREVIATIONS.
2. PREMANHOLE DUCTBANKS SHOWN WITH ASTERISK.

CONDUIT SCHEDULE	
ID	DESCRIPTION
F1	4"C: P.PNL5.1, P.PNL5.2, P.PNL5.7, P.PNL6.8
F2	4"C: SPARE
F3	2"C:P.MCC1.PP1, C.HS.TP2.2,
F4	2"C: (BY KINDER MORGAN)
F5	2"C: (BY KINDER MORGAN)
F6	2"C: (BY KINDER MORGAN)
F7	2"C: (BY KINDER MORGAN)
F8	2"C: IC.FSC.TEMP - NOT IN USE, I.LT.WT
F9	2"C: IC.FSC.AFS
F10	4"C: P.PNL5.8, P.PNL5.13, P.PNL5.14
F11	4"C: P.VFD1.HP1, C.HTR.HP1, C.MWTS.HP1
F12	4"C: P.VFD2.HP2, C.HTR.HP2, C.MWTS.HP2
F13	4"C: P.VFD3.HP3, C.HTR.HP3, C.MWTS.HP3
F14	4"C: P.VFD4.HP4, C.HTR.HP4, C.MWTS.HP4
F15	3"C: C.MOV1A.CTL, C.MOV1B.CTL, C.MOV2A.CTL, C.MOV2B.CTL,C.MOV3A.CTL, C.MOV3B.CTL, C.EFSO.MOV1A, C.EFSO.MOV1B, C.EFSO.MOV2A, C.EFSO.MOV2B, C.EFSO.MOV3A, C.EFSO.MOV3B,
F16	3"C: C.FSC.CJB1.1, C.FSC.CJB1.2
F17	3"C: I.FSC.CJB1.3, I.FSC.CJB1.4, P.FE.RCL1
F18	3"C: C.ME.HFS1, C.JY.HP1, C.FSTS.HP1, C.ME.HFS2, C.JY.HP2, C.FSTS.HP2, C.ME.HFS3, C.JY.HP3, C.FSTS.HP3, C.ME.HFS4, C.JY.HP4, C.FSTS.HP4, C.ME.HFS5, C.JY.HP5, C.FSTS.HP5
F19	2"C: C.TANK1.CTLP, C.TANK2.CTLP, C.TANK3.CTLP, C.LSHH.T1, C.LSHH.T2, C.LSHH.T3
F20	2"C: C.LSH.500, C.FSC.SG, C.FSC.SLTLSHH, C.FSC.SLTLA, C.FSC.LABLSH, C.FSC.KM - NOT IN USE, C.EFSO.AIRSIDE - NOT IN USE
F21	4"C: SPARE
F22	4"C: P.MCC1.TP2, C.HTR.TP2, C.MWTS.TP2, C.HS.TP2.1, C.FS.TP2, C.JY.TP2
F23	4"C: P.VFD5.HP5, C.HTR.HP5, C.MWTS.HP5
F24	4"C: (FUTURE HP-6)
F25	4"C: (FUTURE HP-7)
F26	3"C: SPARE
F27	3"C: IS.TLS.HCARBON
F28	2"C: IC.FSC.WTG
F29	2"C: SPARE
F30	2"C: C.HS.HP1.1, C.HS.HP1.2, C.HS.HP2.1, C.HS.HP2.2, C.HS.HP3.1, C.HS.HP3.2, C.HS.HP4.1, C.HS.HP4.2, C.HS.HP5.1, C.HS.HP5.2
F31	2"C: SPARE
F32	4"C: CATHODIC PROTECTION
F33	4"C: SPARE
F34	2"C: SPARE

SECTION F — NOT TO SCALE — E-103, E-111A, E-111B, E-401, E-404

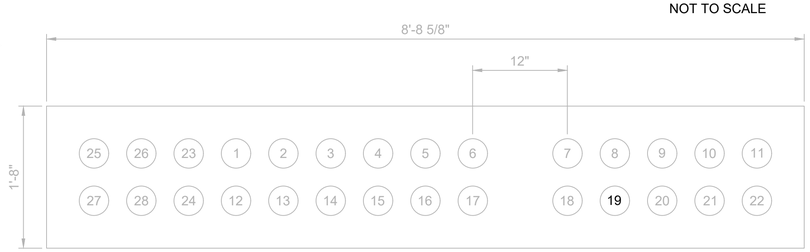

CONDUIT SCHEDULE	
ID	DESCRIPTION
G1	4"C: P.PNL5.1, P.PNL5.2, P.PNL5.7, P.PNL6.8
G2	4"C: P.PNL5.8, P.PNL5.13, P.PNL5.14
G3	4"C: P.VFDHP1.HP1, C.HTR.HP1, C.MWTS.HP1
G4	4"C: P.VFDHP2.HP2, C.HTR.HP2, C.MWTS.HP2
G5	4"C: P.VFDHP3.HP3, C.HTR.HP3, C.MWTS.HP3
G6	4"C: P.VFDHP4.HP4, C.HTR.HP4, C.MWTS.HP4
G7	3"C: C.MOV1A.CTL, C.MOV1B.CTL, C.MOV2A.CTL, C.MOV2B.CTL,C.MOV3A.CTL, C.MOV3B.CTL, C.EFSO.MOV1A, C.EFSO.MOV1B, C.EFSO.MOV2A, C.EFSO.MOV2B, C.EFSO.MOV3A, C.EFSO.MOV3B,
G8	3"C: C.FSC.CJB1.1, C.FSC.CJB1.2
G9	3"C: I.FSC.CJB1.3, I.FSC.CJB1.4, P.FE.RCL1
G10	3"C: C.ME.HFS1, C.JY.HP1, C.FSTS.HP1, C.ME.HFS2, C.JY.HP2, C.FSTS.HP2, C.ME.HFS3, C.JY.HP3, C.FSTS.HP3, C.ME.HFS4, C.JY.HP4, C.FSTS.HP4, C.ME.HFS5, C.JY.HP5 C.FSTS.HP5,
G11	2"C: C.HS.HP1.1, C.HS.HP1.2, C.HS.HP2.1, C.HS.HP2.2, C.HS.HP3.1, C.HS.HP3.2, C.HS.HP4.1, C.HS.HP4.2, C.HS.HP5.1, C.HS.HP5.2
G12	4"C: SPARE
G13	4"C: SPARE
G14	4"C: P.MCC1.TP2, C.HTR.TP2, C.MWTS.TP2, C.HS.TP2.1, C.FS.TP2, C.JY.TP2
G15	4"C: P.VFDHP5.HP5, C.HTR.HP5, C.MWTS.HP5
G16	4"C: (FUTURE HP-6)
G17	4"C: (FUTURE HP-7)
G18	3"C: SPARE
G19	3"C: IS.TLS.HCARBON
G20	2"C: IC.FSC.WTG
G21	2"C: C.TANK1.CTLP, C.TANK2.CTLP, C.TANK3.CTLP, C.LSHH.T1, C.LSHH.T2, C.LSHH.T3
G22	2"C: SPARE
G23	4"C: CATHODIC PROTECTION
G24	4"C: SPARE
G25	2"C: (BY KINDER MORGAN)
G26	2"C: (BY KINDER MORGAN)
G27	2"C: (BY KINDER MORGAN)
G28	2"C: (BY KINDER MORGAN)

SECTION G — NOT TO SCALE — E-103, E-111A, E-111B

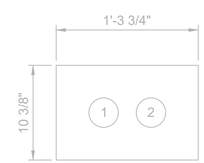

CONDUIT SCHEDULE	
ID	DESCRIPTION
H1	2"C: C.HS.HP1.1, C.HS.HP1.2, C.HS.HP2.1, C.HS.HP2.2, C.HS.HP3.1, C.HS.HP3.2, C.HS.HP4.1, C.HS.HP4.2, C.HS.HP5.1, C.HS.HP5.2
H2	2"C: SPARE (FUTURE HP-6, HP-7)

SECTION H — NOT TO SCALE — E-103, E-111A, E-111B, E-402

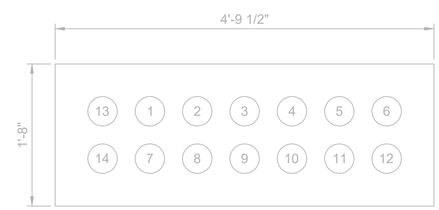

CONDUIT SCHEDULE	
ID	DESCRIPTION
I1	4"C: P.PNL5.1, P.PNL5.2, P.PNL5.7, P.PNL6.8
I2	4"C: SPARE
I3	4"C: P.VFD1.HP1, C.HTR.HP1, C.MWTS.HP1
I4	4"C: P.VFD2.HP2, C.HTR.HP2, C.MWTS.HP2
I5	4"C: P.VFD3.HP3, C.HTR.HP3, C.MWTS.HP3
I6	4"C: P.VFD4.HP4, C.HTR.HP4, C.MWTS.HP4
I7	4"C: P.PNL5.8, P.PNL5.13, P.PNL5.14
I8	4"C: SPARE
I9	4"C: P.MCC1.TP2, C.HTR.TP2, C.MWTS.TP2, C.HS.TP2.1, C.FS.TP2, C.JY.TP2
I10	4"C: P.VFD5.HP5, C.HTR.HP5, C.MWTS.HP5
I11	4"C: (FUTURE HP-6)
I12	4"C: (FUTURE HP-7)
I13	4"C: CATHODIC PROTECTION
I14	4"C: SPARE

SECTION I — NOT TO SCALE — E-103, E-111A, E-111B, E-402

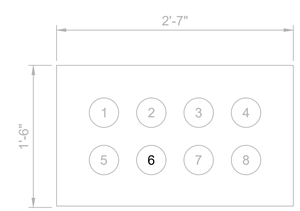

CONDUIT SCHEDULE	
ID	DESCRIPTION
J1	3"C: C.MOV1A.CTL, C.MOV1B.CTL, C.MOV2A.CTL, C.MOV2B.CTL,C.MOV3A.CTL, C.MOV3B.CTL, C.EFSO.MOV1A, C.EFSO.MOV1B, C.EFSO.MOV2A, C.EFSO.MOV2B, C.EFSO.MOV3A, C.EFSO.MOV3B,
J2	3"C: C.FSC.CJB1.1, C.FSC.CJB1.2
J3	3"C: I.FSC.CJB1.3, I.FSC.CJB1.4, P.FE.RCL1
J4	3"C: C.ME.HFS1, C.JY.HP1, C.FSTS.HP1, C.ME.HFS2, C.JY.HP2, C.FSTS.HP2, C.ME.HFS3, C.JY.HP3, C.FSTS.HP3, C.ME.HFS4, C.JY.HP4, C.FSTS.HP4, C.ME.HFS5, C.JY.HP5 C.FSTS.HP5,
J5	3"C: SPARE
J6	3"C: IS.TLS.HCARBON
J7	2"C: IC.FSC.WTG
J8	2"C: C.TANK1.CTLP, C.TANK2.CTLP, C.TANK3.CTLP, C.LSHH.T1, C.LSHH.T2, C.LSHH.T3

SECTION J — NOT TO SCALE — E-103, E-111A, E-111B, E-402

12/20/2023

REGISTERED PROFESSIONAL ENGINEER 100084PE OREGON JULY 12, 2022 TIMOTHY RENSHAW
EXPIRES: 12/31/2024

no.	date	by	ckd	description
A	12/21/23	TSR	BAW	ISSUED FOR PERMIT

ISSUED FOR PERMIT ONLY

BURNS McDONNELL
9400 WARD PARKWAY
KANSAS CITY, MO 64114
816-333-9400
Burns & McDonnell Engineering Co, Inc.

date	detailed
04/24/2023	S. JESBERG
designed	checked
T. RENSHAW	B. WINTER

PDX FUEL COMPANY L.L.C

PORTLAND INTERNATIONAL AIRPORT
5000 NE MARINE DR.
PORTLAND, OREGON 97218

PDX FACILITY IMPROVEMENTS
DUCTBANK SECTIONS - 2

project	contract
153929	

drawing **E-302** rev. **A**

file 153929E-302.dwg

NOTE:

1. SEE SHEET E-001 FOR GENERAL NOTES, LEGEND AND ABBREVIATIONS.

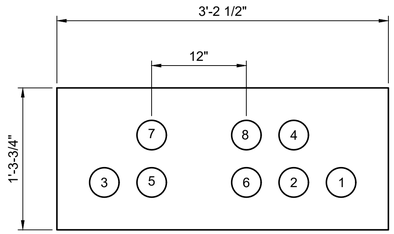

CONDUIT SCHEDULE	
ID	DESCRIPTION
K1	2"C: C.FACU.OPS
K2	2"C: IC.FSC.FSHMI, IC.FSC.EFSOHMI, IC.FSC.PR, IC.GEN.RGAP
K3	2"C: C.EPO.GEN, C.EFSO.OPSRM
K4	2"C: IC.INTERNET.OPS
K5	2"C: P.SWBD2.OPS
K6	2"C: SPARE
K7	2"C: SPARE
K8	2"C: SPARE

SECTION K — E-103, E-104, E-111B, E-404

NOT TO SCALE

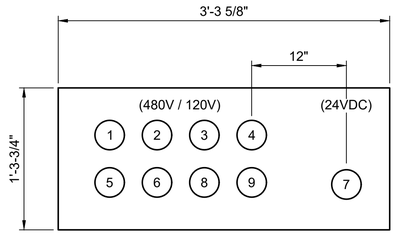

CONDUIT SCHEDULE	
ID	DESCRIPTION
L1	2"C: C.EFSO.OP1
L2	2"C: P.FIT.OP1, I.FIT.OP1
L3	2"C: P.LP1.7.1
L4	3"C: P.MCC1.OP1, C.MWTS.OP1, C.HTR.OP1, C.FS.OP1, C.HS.OP1
L5	2"C: SPARE
L6	2"C: SPARE
L7	2"C: SPARE
L8	2"C: SPARE
L9	2"C: SPARE

SECTION L — E-104, E-111B, E-405

NOT TO SCALE

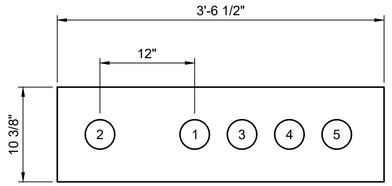

CONDUIT SCHEDULE	
ID	DESCRIPTION
M1	2"C: P.PNLH1.X (AREA LIGHTS) FED FROM OPERATIONS BUILDING LIGHTING CONTACTOR (SEE OPERATIONS BUILDING PANEL SCHEDULE)
M2	2"C: IC.OPS.EC01
M3	2"C: P.PNLA.57 (WEST GATE POWER), P.PNLA.69 (AOA GATE POWER) (ENDS UP IN MECH ROOM 102)
M4	2"C: SPARE
M5	2"C: P.PA2.79 (EC01) (SEE OPERATIONS BUILDING PANEL SCHEDULE)

SECTION M — E-104, E-111B

NOT TO SCALE

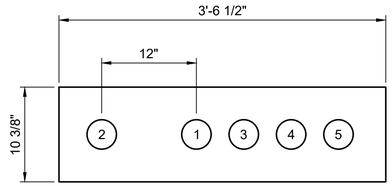

CONDUIT SCHEDULE	
ID	DESCRIPTION
N1	2"C: P.PNLH1.X (AREA LIGHTS) FED FROM OPERATIONS BUILDING LIGHTING CONTACTOR (SEE OPERATIONS BUILDING PANEL SCHEDULE)
N2	2"C: IC.OPS.EC01
N3	2"C: P.PNLA.57 (WEST GATE POWER), P.PNLA.69 (AOA GATE POWER) (ENDS UP IN MECH ROOM 102)
N4	2"C: SPARE
N5	2"C: P.PA2.79 (EC01) (SEE OPERATIONS BUILDING PANEL SCHEDULE)

SECTION N — E-104, E-111B

NOT TO SCALE

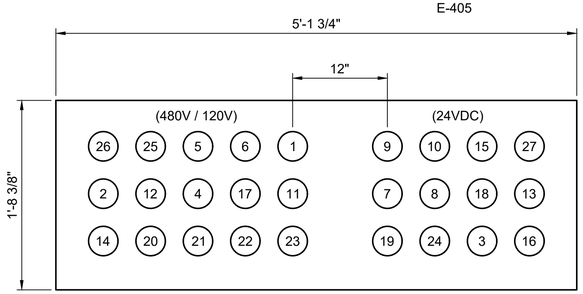

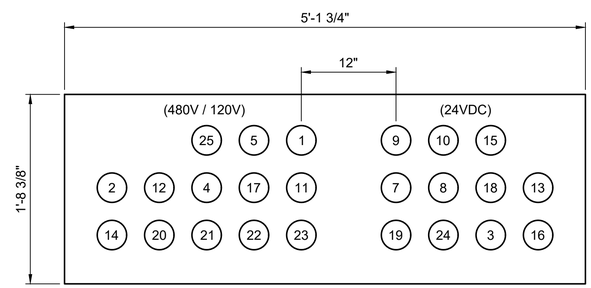

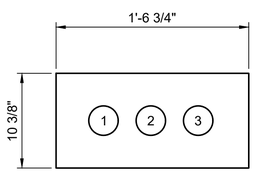

CONDUIT SCHEDULE	
ID	DESCRIPTION
P1	2"C: P.PNLH1.X (AREA LIGHTS) FED FROM OPERATIONS BUILDING LIGHTING CONTACTOR (SEE OPERATIONS BUILDING PANEL SCHEDULE)
P2	2"C: SPARE
P3	2"C: SPARE

SECTION P — E-104, E-111B

NOT TO SCALE

CONDUIT SCHEDULE	
ID	DESCRIPTION
Q1	2"C: C.EFSO.HCTS, C.EFSO.OP2
Q2	2"C: C.FSC.HCTSAP
Q3	2"C: SPARE
Q4	2"C: SPARE
Q5	3"C: P.MCC1.OP2, C.MWTS.OP2, C.HTR.OP2, C.FS.OP2, C.HS.OP2
Q6	2"C: P.PNLP5.26 (CONSTR. TRAILER POWER)
Q7	2"C: SPARE
Q8	2"C: IC.OPS.EC02, IC.OPS.EC03, IC.OPS.EC04, IC.OPS.EC05, IC.OPS.EC06
Q9	2"C: SPARE
Q10	2"C: SPARE
Q11	2"C: C.FSC.MOVRCS, C.FSC.MOVRCR, C.EFSO.MOVRCS, C.EFSO.MOVRCR
Q12	2"C: P.PNL5.19
Q13	2"C: I.FIT.OP2, P.FIT.OP2, I.PT.TP1, I.TT.TP1, I.VTX.TP1, I.VTY.TP1, P.FIT.HCTS, I.FIT.HCTS, I.DPIT.RFS1, I.DPIT.RFS2
Q14	2"C: C.MS.RFS1, C.MS.RFS2, C.LSH.SS4, C.LSHH.RCT
Q15	2"C: SPARE
Q16	2"C: SPARE
Q17	2"C: SPARE
Q18	2"C: SPARE
Q19	2"C: SPARE
Q20	2"C: P.PNL6.34, P.LP1.11
Q21	2"C: C.TLS.OAS
Q22	2"C: SPARE
Q23	3"C: P.VFDTP1.TP1, C.HTR.TP1, C.MWTS.TP1, C.FSTS.TP1, C.HS.HCTS
Q24	2"C: IS.TLS.LT.RCT, IS.TLS.LD.RCT
Q25	2"C: SPARE
Q26	2"C: P.PA2.75 (EC02,EC03,EC06) , P.PA2.77 (EC04,EC05)
Q27	2"C: SPARE

SECTION Q — E-104, E-111B

NOT TO SCALE

CONDUIT SCHEDULE	
ID	DESCRIPTION
R1	2"C: C.EFSO.HCTS, C.EFSO.OP2
R2	2"C: C.FSC.HCTSAP
R3	2"C: SPARE
R4	2"C: SPARE
R5	3"C: P.MCC1.OP2, C.MWTS.OP2, C.HTR.OP2, C.FS.OP2, C.HS.OP2
R6	NOT USED
R7	2"C: IC.EC02.CT22, IC.EC02.CT23
R8	2"C: SPARE
R9	2"C: SPARE
R10	2"C: SPARE
R11	2"C: C.FSC.MOVRCS, C.FSC.MOVRCR, C.EFSO.MOVRCS, C.EFSO.MOVRCR
R12	2"C: P.PNL5.19
R13	2"C: I.FIT.OP2, P.FIT.OP2, I.PT.TP1, I.TT.TP1, I.VTX.TP1, I.VTY.TP1, P.FIT.HCTS, I.FIT.HCTS, I.DPIT.RFS1, I.DPIT.RFS2
R14	C.MS.RFS1, C.MS.RFS2, C.LSH.SS4, C.LSHH.RCT
R15	2"C: SPARE
R16	2"C: SPARE
R17	2"C: SPARE
R18	2"C: SPARE
R19	2"C: SPARE
R20	2"C: P.PNL6.34, P.LP1.11
R21	2"C: C.TLS.OAS
R22	2"C: SPARE
R23	3"C: P.VFDTP1.TP1, C.HTR.TP1, C.MWTS.TP1, C.FSTS.TP1, C.HS.HCTS
R24	2"C: IS.TLS.LT.RCT, IS.TLS.LD.RCT
R25	2"C: SPARE

SECTION R — E-104, E-111B

NOT TO SCALE

12/20/2023

REGISTERED PROFESSIONAL ENGINEER — 100080PE — OREGON — MAY 12, 2023 — TIMOTHY RENSHAW

EXPIRES: 12/31/2024

no.	date	by	ckd	description
A	12/21/23	TSR	BAW	ISSUED FOR PERMIT

ISSUED FOR PERMIT ONLY

BURNS McDONNELL
9400 WARD PARKWAY
KANSAS CITY, MO 64114
816-333-9400
Burns & McDonnell Engineering Co, Inc.

date	detailed
04/24/2023	S. JESBERG
designed	checked
T. RENSHAW	B. WINTER

PDX FUEL COMPANY L.L.C

PORTLAND INTERNATIONAL AIRPORT
5000 NE MARINE DR.
PORTLAND, OREGON 97218

PDX FACILITY IMPROVEMENTS
DUCTBANK SECTIONS - 3

project	contract
153929	

drawing **E-303** rev. **A**

file 153929E-303.dwg

NOTE:

1. SEE SHEET E-001 FOR GENERAL NOTES, LEGEND AND ABBREVIATIONS.

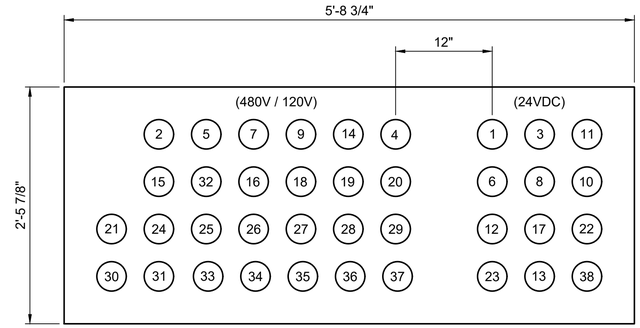

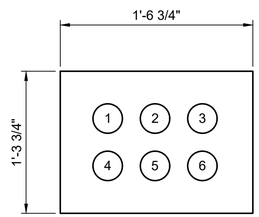

CONDUIT SCHEDULE	
ID	DESCRIPTION
S1	2"C: IC.OPS.EC02, IC.OPS.EC03, IC.OPS.EC04, IC.OPS.EC05, IC.OPS.EC06
S2	2"C: P.PA2.75 (EC02,EC03,EC06) , P.PA2.77 (EC04,EC05)
S3	2"C: P.PNLP5.26 (CONSTR. TRAILER POWER)
S4	2"C: IC.EC02.CT22, IC.EC02.CT23
S5	2"C: SPARE
S6	2"C: SPARE

SECTION S
NOT TO SCALE
E-104
E-111B

CONDUIT SCHEDULE	
ID	DESCRIPTION
T1	2"C: SPARE
T2	2"C: C.FSC.MOVRCS, C.FSC.MOVRCR, C.EFSO.MOVRCS, C.EFSO.MOVRCR
T3	2"C: I.FIT.OP2, P.FIT.OP2, I.PT.TP1, I.TT.TP1, I.VTX.TP1, I.VTY.TP1, P.FIT.HCTS, I.FIT.HCTS, I.DPIT.RFS1, I.DPIT.RFS2
T4	2"C: C.MS.RFS1, C.MS.RFS2, C.LSH.SS4, C.LSHH.RCT
T5	2"C: P.FIT.OP1, I.FIT.OP1
T6	2"C: SPARE
T7	3"C: P.MCC1.OP1, C.MWTS.OP1, C.HTR.OP1, C.FS.OP1, C.HS.OP1
T8	2"C: SPARE
T9	2"C: C.EFSO.OP1
T10	2"C: SPARE
T11	2"C: SPARE
T12	2"C: SPARE
T13	2"C: SPARE
T14	2"C: C.EFSO.HCTS, C.EFSO.OP2
T15	2"C: C.FSC.HCTSAP
T16	2"C: SPARE
T17	2"C: SPARE
T18	2"C: P.PNL5.19
T19	3"C: P.MCC1.OP2, C.MWTS.OP2, C.HTR.OP2, C.FS.OP2, C.HS.OP2
T20	2"C: C.TLS.OAS
T21	2"C: SPARE
T22	2"C: IS.TLS.LT.RCT, IS.TLS.LD.RCT
T23	2"C: SPARE
T24	2"C: SPARE
T25	2"C: SPARE
T26	2"C: SPARE
T27	2"C: SPARE
T28	2"C: P.PNL6.34, P.LP1.11
T29	2"C: SPARE
T30	3"C: P.VFDTP1.TP1, C.HTR.TP1, C.MWTS.TP1, C.FSTS.TP1, C.HS.HCTS
T31	2"C: P.LP1.7.1
T32	2"C: P.PNLP5.26 (CONSTR. TRAILER POWER)
T33	2"C: SPARE
T34	2"C: SPARE
T35	2"C: SPARE
T36	IC.OPS.EC02, IC.OPS.EC03, IC.OPS.EC04, IC.OPS.EC05
T37	2"C: P.PA2.75 (EC02,EC03,EC06), P.PA2.77 (EC04,EC05)
T38	2"C: SPARE

SECTION T
NOT TO SCALE
E-104
E-111B

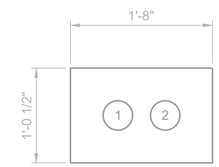

CONDUIT SCHEDULE	
ID	DESCRIPTION
V1	4"C: (BY KINDER MORGAN)
V2	4"C: (BY KINDER MORGAN)

SECTION V
NOT TO SCALE
E-401
E-404
E-111A
E-111B

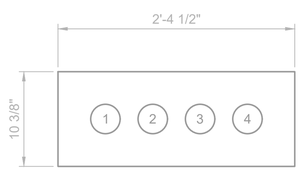

CONDUIT SCHEDULE	
ID	DESCRIPTION
W1	2"C: (BY KINDER MORGAN)
W2	2"C: (BY KINDER MORGAN)
W3	2"C: (BY KINDER MORGAN)
W4	2"C: (BY KINDER MORGAN)

SECTION W
NOT TO SCALE
E-103
E-111A
E-111B

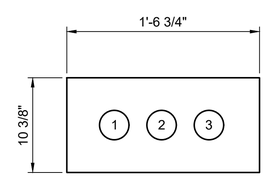

CONDUIT SCHEDULE	
ID	DESCRIPTION
X1	2"C: IC.OPS.EC03, IC.OPS.EC04, IC.OPS.EC05, IC.OPS.EC06
X2	2"C: P.PA2.75 (EC02,EC03,EC06) , P.PA2.77 (EC04,EC05)
X3	2"C: P.PNLH1.X (AREA LIGHTS) FED FROM OPERATIONS BUILDING LIGHTING CONTACTOR (SEE OPERATIONS BUILDING PANEL SCHEDULE)

SECTION X
NOT TO SCALE
E-104
E-111B

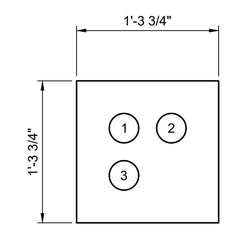

CONDUIT SCHEDULE	
ID	DESCRIPTION
Y1	2"C: IC.OPS.EC02, IC.OPS.EC03, IC.OPS.EC04, IC.OPS.EC05, IC.OPS.EC06
Y2	2"C: P.PA2.75 (EC02,EC03,EC04) , P.PA2.77 (EC05,EC06) (SEE OPERATIONS BUILDING PANEL SCHEDULE)
Y3	2"C: SPARE

SECTION Y
NOT TO SCALE
E-104
E-111B

12/20/2023

REGISTERED PROFESSIONAL ENGINEER 100084PE OREGON JULY 12, 2022 TIMOTHY RENSHAW
EXPIRES: 12/31/2024

no.	date	by	ckd	description
A	12/21/23	TSR	BAW	ISSUED FOR PERMIT

ISSUED FOR PERMIT ONLY

BURNS McDONNELL
9400 WARD PARKWAY
KANSAS CITY, MO 64114
816-333-9400
Burns & McDonnell Engineering Co, Inc.

date	detailed
04/24/2023	S. JESBERG
designed	checked
T. RENSHAW	B. WINTER

PDX FUEL COMPANY L.L.C

PORTLAND INTERNATIONAL AIRPORT
5000 NE MARINE DR.
PORTLAND, OREGON 97218

PDX FACILITY IMPROVEMENTS
DUCTBANK SECTIONS - 4

project	contract
153929	

drawing **E-304** rev. **A**

file 153929E-304.dwg

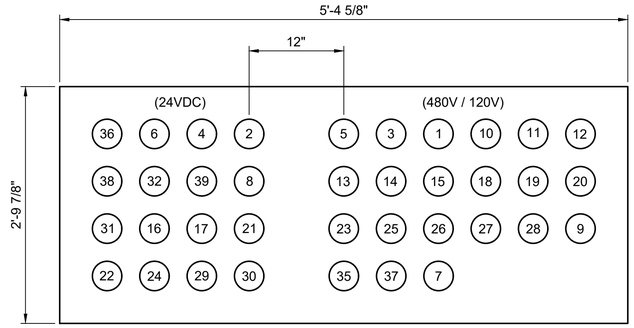

CONDUIT SCHEDULE	
ID	DESCRIPTION
Z1	2"C: C.EFSO.OP1, C.EFSO.OP2, C.EFSO.HCTS
Z2	2"C: P.FIT.OP1, I.FIT.OP1
Z3	2"C: P.PNLP5.26 (CONSTR. TRAILER POWER)
Z4	2"C: IC.FSC.AFS
Z5	2"C: SPARE
Z6	2"C: SPARE
Z7	2"C: C.FSC.MOVRCS, C.FSC.MOVRCR, C.EFSO.MOVRCS, C.EFSO.MOVRCR
Z8	2"C: I.FIT.OP2, P.FIT.OP2, I.PT.TP1, I.TT.TP1, I.VTX.TP1, I.VTY.TP1, P.FIT.HCTS, I.FIT.HCTS, I.DPIT.RFS1, I.DPIT.RFS2
Z9	C.MS.RFS1, C.MS.RFS2, C.LSH.SS4, C.LSHH.RCT
Z10	2"C: SPARE
Z11	2"C: SPARE
Z12	2"C: SPARE
Z13	2"C: SPARE
Z14	2"C: P.LP1.7.1, P.LP1.11
Z15	3"C: P.MCC1.OP1, C.MWTS.OP1, C.HTR.OP1, C.FS.OP1, C.HS.OP1
Z16	2"C: SPARE
Z17	2"C: SPARE
Z18	2"C: SPARE
Z19	2"C: SPARE
Z20	2"C: C.TLS.OAS
Z21	2"C: SPARE
Z22	2"C: C.FSC.HCTSAP
Z23	2"C: SPARE
Z24	2"C: SPARE
Z25	2"C: P.PNL5.19
Z26	3"C: P.MCC1.OP2, C.MWTS.OP2, C.HTR.OP2, C.FS.OP2, C.HS.OP2
Z27	2"C: SPARE
Z28	2"C: SPARE
Z29	2"C: IS.TLS.LT.RCT, IS.TLS.LD.RCT
Z30	2"C: SPARE
Z31	2"C: SPARE
Z32	2"C: SPARE
Z33	NOT USED
Z34	NOT USED
Z35	2"C: P.PNL6.34
Z36	2"C: IC.AOA.FIBER
Z37	3"C: P.VFDTP1.TP1, C.HTR.TP1, C.MWTS.TP1, C.FSTS.TP1, C.HS.HCTS
Z38	2"C: SPARE
Z39	2"C: SPARE

SECTION Z
NOT TO SCALE
E-103
E-104
E-111B

NOTE:

1. SEE SHEET E-001 FOR GENERAL NOTES, LEGEND AND ABBREVIATIONS.

no.	date	by	ckd	description
A	12/21/23	TSR	BAW	ISSUED FOR PERMIT

ISSUED FOR PERMIT ONLY

BURNS McDONNELL
9400 WARD PARKWAY
KANSAS CITY, MO 64114
816-333-9400
Burns & McDonnell Engineering Co, Inc.

date	detailed
04/24/2023	S. JESBERG
designed	checked
T. RENSHAW	B. WINTER

PDX FUEL COMPANY L.L.C

PORTLAND INTERNATIONAL AIRPORT
5000 NE MARINE DR.
PORTLAND, OREGON 97218

PDX FACILITY IMPROVEMENTS
DUCTBANK SECTIONS - 5

project	contract
153929	

drawing **E-305** rev. **A**

file 153929E-305.dwg

12/20/2023

REGISTERED PROFESSIONAL ENGINEER 100084PE OREGON JULY 12, 2022 TIMOTHY RENSHAW
EXPIRES: 12/31/2024

Scale For Microfilming
Millimeters
Inches

NOTES:

1. SEE SHEET E-001 FOR GENERAL NOTES, LEGEND AND ABBREVIATIONS.
2. CONDUIT ROUTING IS SCHEMATIC IN NATURE.
3. SEE SHEETS E-301 - E-305 FOR DUCTBANK SECTIONS.

KEYED NOTES:

1. SEE WIRING DIAGRAM ON DRAWING E-619, DETAIL 3 FOR ADDITIONAL INFORMATION.
2. (2) SPARE CONDUIT CAPPED UNDERGROUND.
3. DUCTBANK SERVES THE FOLLOWING:
   - A. C.EPO.GEN - TO NEW EPO BUTTON FURNISHED WITH GENERATOR.
   - B. C.EFSO.OPSRM - TO EXISTING EFSO PUSHBUTTON LOCATED IN OPERATIONS ROOM.
   - C. C.FACU.OPS - TO FIRE ALARM SYSTEM
   - D. IC.FSC.FSHMI - TO FUEL SYSTEM WORK STATION.
   - E. IC.FSC.EFSOHMI - TO EFSO SYSTEM WORKSTATION
   - F. IC.FSC.PR - TO PRINTER
   - G. IC.GEN.RGAP - TO NEW REMOTE GENERATOR ALARM PANEL FURNISHED WITH GENERATOR
   - H. IC.INTERNET.OPS

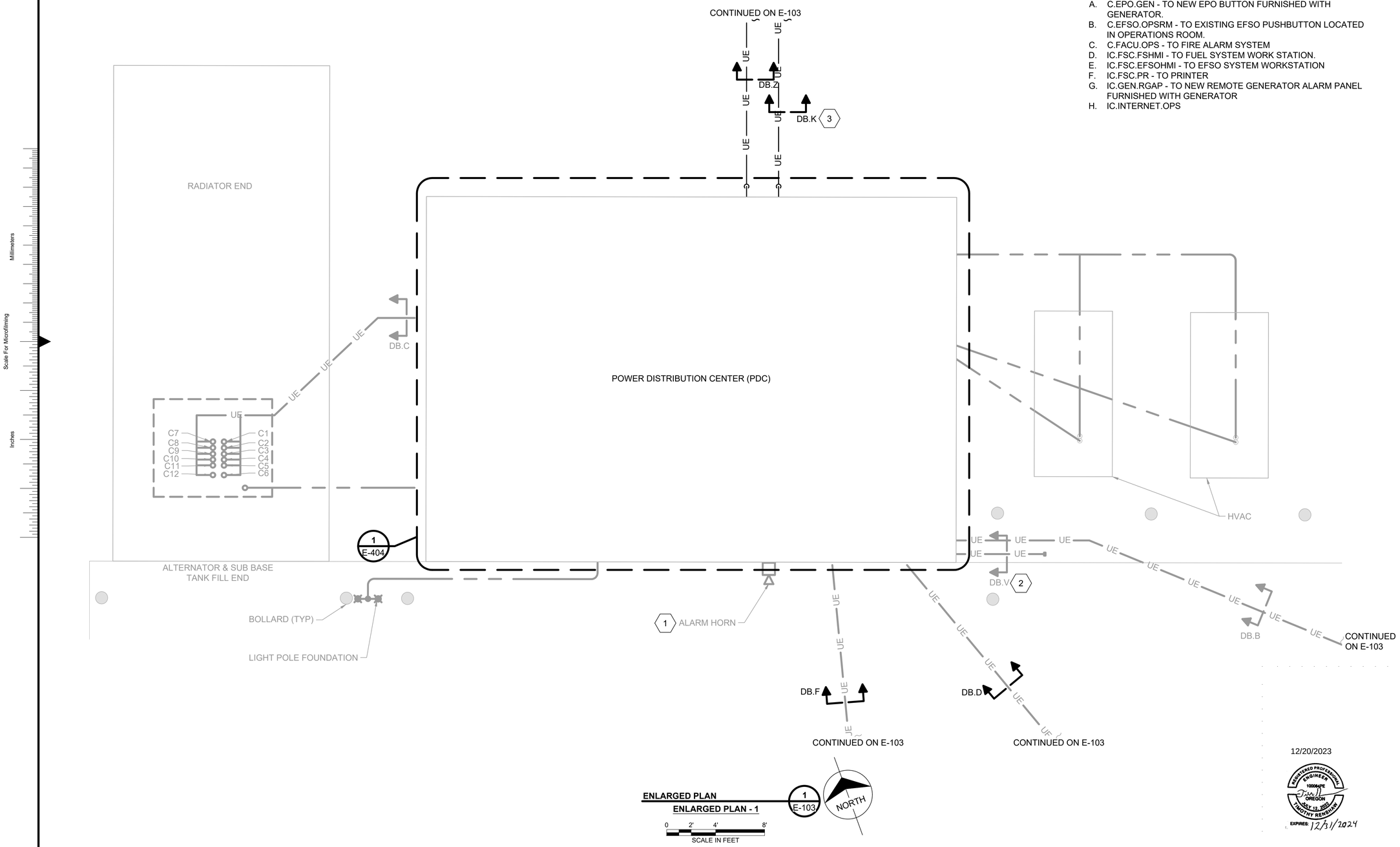

ENLARGED PLAN

ENLARGED PLAN - 1

1 E-103

0 2' 4' 8'

SCALE IN FEET

no.	date	by	ckd	description
A	12/21/23	TSR	BAW	ISSUED FOR PERMIT

ISSUED FOR PERMIT ONLY

BURNS McDONNELL
9400 WARD PARKWAY
KANSAS CITY, MO 64114
816-333-9400
Burns & McDonnell Engineering Co, Inc.

date	detailed
04/24/2023	S. JESBERG
designed	checked
T. RENSHAW	B. WINTER

PDX FUEL COMPANY L.L.C

PORTLAND INTERNATIONAL AIRPORT
5000 NE MARINE DR.
PORTLAND, OREGON 97218

PDX FACILITY IMPROVEMENTS

ENLARGED PLAN - 1

project	contract
153929	

drawing **E-401** rev. **A**

12/20/2023

REGISTERED PROFESSIONAL ENGINEER 100084PE OREGON JULY 12, 2002 TIMOTHY RENSHAW

EXPIRES: 12/31/2024

file 153929E-401.dwg

CONDUIT SCHEDULE:

1. 2"C: I.PT.MAIN3, I.DPT.HFS1, I.DPT.HFS2, I.DPT.HFS3, I.DPT.HFS4, I.DPT.HFS5, I.DPT.FS6, I.DPT.CF1, I.DPT.PF1, I.FE.RCL1, P.FE.RCL1,
2. NOT USED
3. 2"C: I.TT.HP1, I.VT.HP1.1, I.VT.HP1.2, I.TT.HP2, I.VT.HP2.1, I.VT.HP2.2, I.TT.HP3, I.VT.HP3.1, I.VT.HP3.2, I.TT.HP4, I.VT.HP4.1, I.VT.HP4.2, I.TT.HP5, I.VT.HP5.1, I.VT.HP5.2
4. 3"C: C.ME.HFS1, C.FSTS.HP1, C.ME.HFS2, C.FSTS.HP2, C.ME.HFS3, C.FSTS.HP3, C.ME.HFS4, C.FSTS.HP4, C.ME.HFS5, C.FSTS.HP5
5. 3/4"C: C.EFSO.PPA, C.EFSO.T3EX, C.EFSO.T12EX
6. 3"C: C.JY.HP1, C.JY.HP2, C.JY.HP3, C.JY.HP4, C.JY.HP5, C.JY.RCL1, C.JY.RCL2
7. 2"C: I.FE.HP1, I.FE.HP2, I.FE.HP3, I.FE.HP4, I.FE.HP5, I.PT.MAIN1, I.PT.MAIN2
8. 4"C: P.VFD1.HP1 C.MWTS.HP1, C.HTR.HP1
9. 4"C: P.VFD2.HP2 C.MWTS.HP2, C.HTR.HP2
10. 4"C: P.VFD3.HP3 C.MWTS.HP3, C.HTR.HP3
11. 4"C: P.VFD4.HP4 C.MWTS.HP4, C.HTR.HP4
12. 4"C: P.VFD5.HP5 C.MWTS.HP5, C.HTR.HP5
13. 1"C: C.AE.FS6
14. NOT USED
15. 1"C: P.PNL5.1, P.PNL5.2, P.PNL5.7, P.PNL6.8
16. 1"C: P.PNL5.8, P.PNL5.13, P.PNL5.14
17. 3"C: C.MOV1A.CTL, C.EFSO.MOV1A, C.MOV1B.CTL, C.EFSO.MOV1B, C.MOV2A.CTL, C.EFSO.MOV2A, C.MOV2B.CTL, C.EFSO.MOV2B, C.MOV3A.CTL, C.EFSO.MOV3A, C.MOV3B.CTL, C.EFSO.MOV3B
18. 2"C: C.HS.TP2.1, C.FS.TP2, C.JY.TP2
19. 2"C: P.MCC1.TP2, C.HTR.TP2, C.MWTS.TP2
20. 3/4"C: C.EFSO.T3EX, C.EFSO.T12EX
21. 3/4"C: IC.FSC.WTG
22. 2"C: C.TANK1.CTLP, C.TANK2.CTLP, C.TANK3.CTLP, C.LSHH.T1, C.LSHH.T2, C.LSHH.T3
23. 1"C: P.PNL5.1, P.PNL5.2, P.PNL5.7
24. 1"C: P.PNL6.8
25. 2"C: CATHODIC PROTECTION
26. 3/4"C: C.LSH.SS3
27. 3/4"C: IS.TLS.HCARBON
28. 3/4"C: C.LSH.OWS.O, C.LSH.OWS.L, C.YP14.PERMISSIVE, C.CSP.OWS
29. 3/4"C: C.LSH.OWS.O, C.LSH.OWS.L, C.YP14.PERMISSIVE
30. 3/4"C: C.CSP.OWS
31. 3/4"C: IS.SUMPLS.START
32. 3/4"C: IS.SUMPLS.STOP

NOTE:

1. SEE SHEET E-001 FOR GENERAL NOTES, LEGEND AND ABBREVIATIONS.

KEYED NOTE:

1. DEMO AND REMOVE CONDUITS ASSOCIATED WITH TANKS AFTER COMMISSIONING OF NEW TANKS. DEMO ALL ABOVE GRADE ROUTING.
2. YARD PUMP MOTOR STARTER IS REPLACED WITH "HPP CONTAINMENT SUMP PANEL". SEE E-606.
3. HYDROCARBON LEAK DETECTOR.
4. VENDOR FURNISHED CABLE FOR INTRINSICALLY SAFE, FLOATS

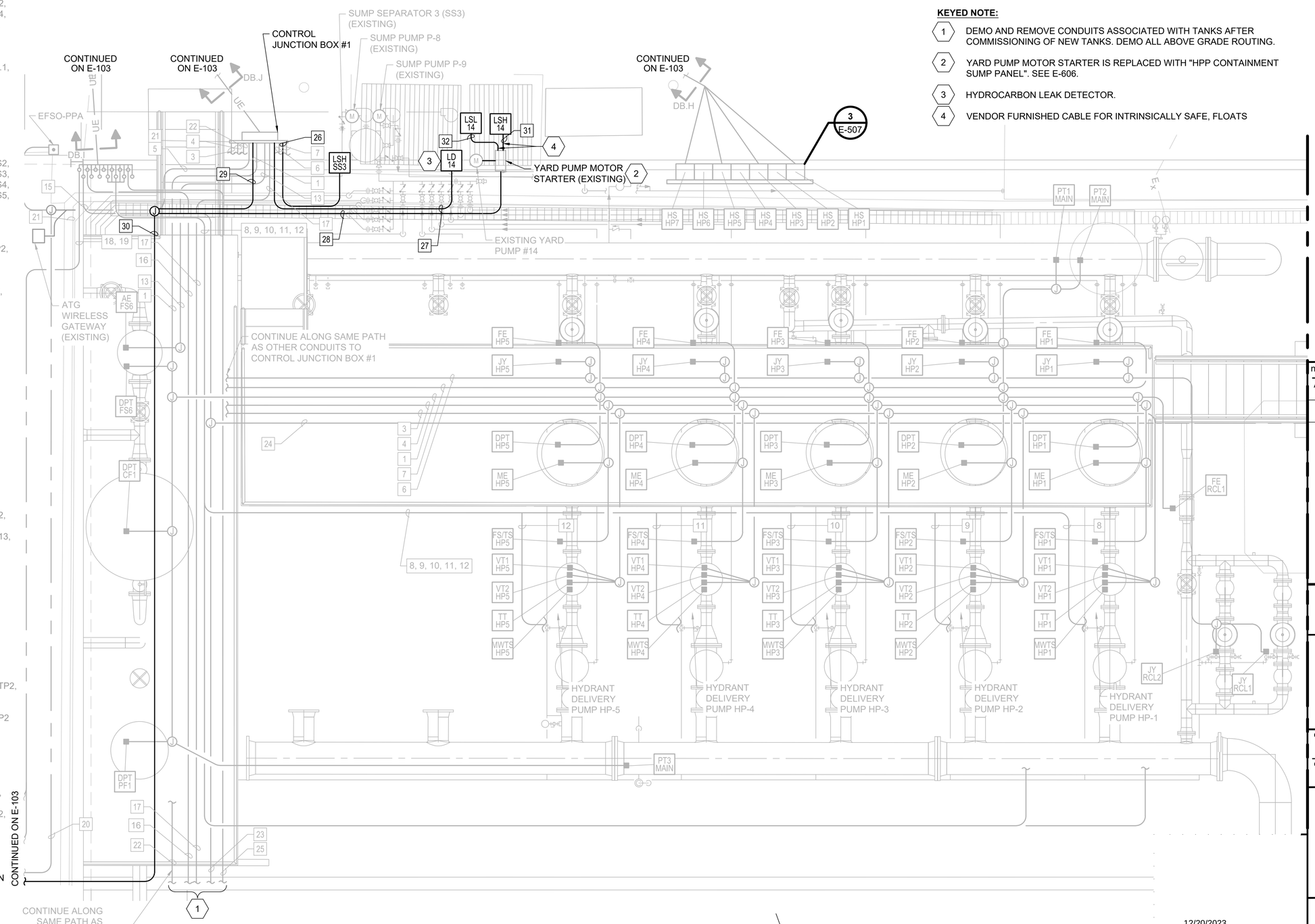

ENLARGED PLAN

ENLARGED PLAN - 2

1 / E-103

0 2' 4' 6'
SCALE IN FEET

NORTH

12/20/2023

REGISTERED PROFESSIONAL ENGINEER 10008PE OREGON JULY 12, 2022 TIMOTHY RENSHAW
EXPIRES: 12/31/2024

no.	date	by	ckd	description
A	12/21/23	TSR	BAW	ISSUED FOR PERMIT

ISSUED FOR PERMIT ONLY

BURNS McDONNELL
9400 WARD PARKWAY
KANSAS CITY, MO 64114
816-333-9400
Burns & McDonnell Engineering Co, Inc.

date	detailed
04/24/2023	S. JESBERG
designed	checked
T. RENSHAW	B. WINTER

PDX FUEL COMPANY L.L.C

PORTLAND INTERNATIONAL AIRPORT
5000 NE MARINE DR.
PORTLAND, OREGON 97218

PDX FACILITY IMPROVEMENTS
ENLARGED PLAN - 2

project	contract
153929	

drawing **E-402** rev. **A**

file 153929E-402.dwg

NOTES:

1. SEE SHEET E-001 FOR GENERAL NOTES, LEGEND AND ABBREVIATIONS.
2. SEE SHEET E-103 FOR ADDITIONAL DETAILS.
3. INTERNAL CONDUIT STUB UPS ARE LEFT BLANK AND SHOWN WITHOUT ROUTING FOR DRAWING CLARITY.

KEYED NOTE:

1. FOR KINDER MORGAN USE.
2. EXISTING SPARES
3. CONDUIT TO STUB UP OUTSIDE OF PDC AND ENTER THE SIDE OF THE BUILDING. ROUTE THROUGH CABLE TRAY TO FINAL LOCATIONS.
4. SEE E-401 FOR ADDITIONAL INFORMATION.

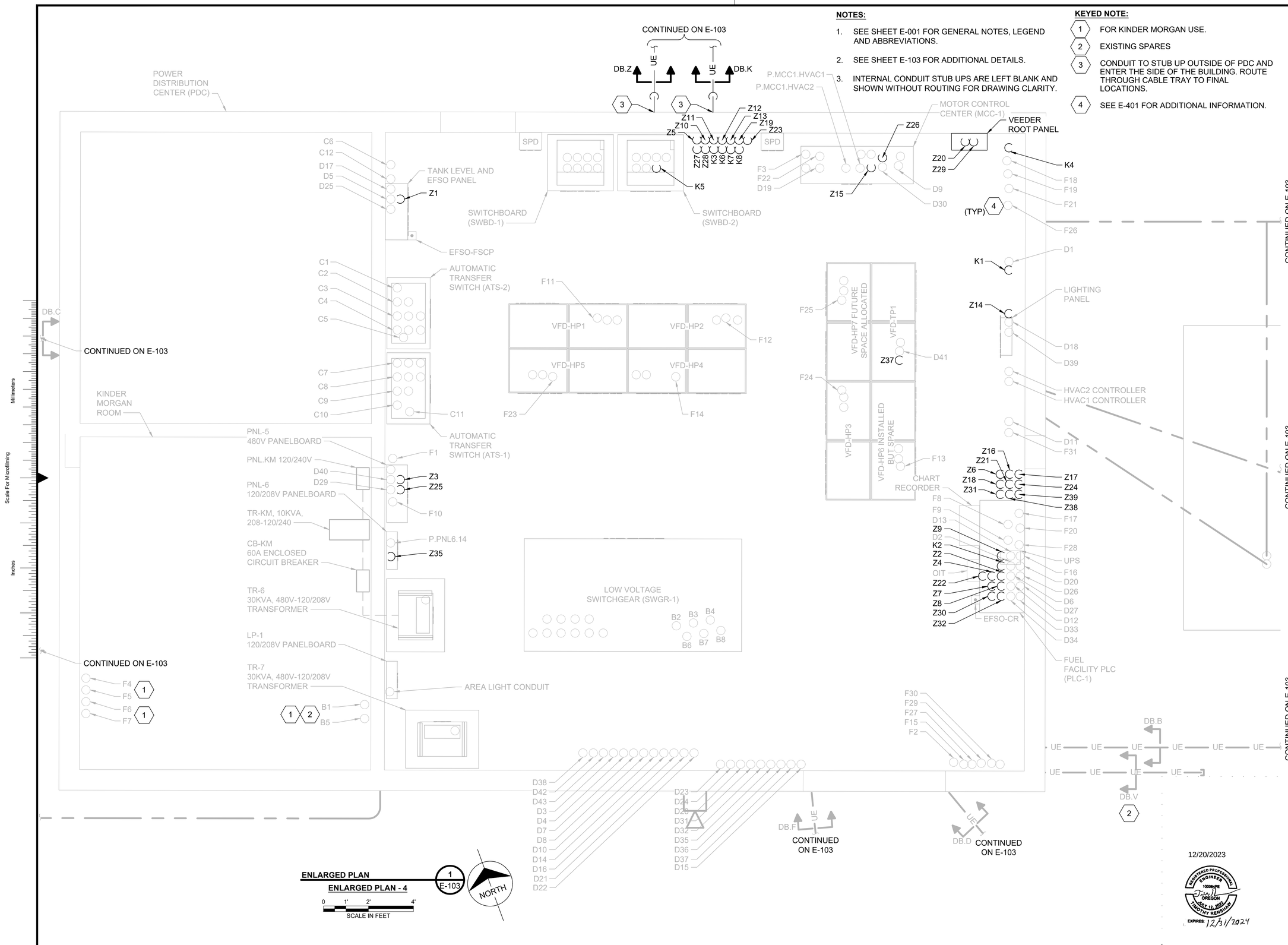

no.	date	by	ckd	description
A	12/21/23	TSR	BAW	ISSUED FOR PERMIT

ISSUED FOR PERMIT ONLY

BURNS McDONNELL
9400 WARD PARKWAY
KANSAS CITY, MO 64114
816-333-9400
Burns & McDonnell Engineering Co, Inc.

date	detailed
04/24/2023	S. JESBERG
designed	checked
T. RENSHAW	B. WINTER

PDX FUEL COMPANY L.L.C

PORTLAND INTERNATIONAL AIRPORT
5000 NE MARINE DR.
PORTLAND, OREGON 97218

PDX FACILITY IMPROVEMENTS
ENLARGED PLAN - 4

project	contract
153929	

drawing **E-404** rev. **A**

file 153929E-404.dwg

12/20/2023

REGISTERED PROFESSIONAL ENGINEER 100088PE OREGON JULY 12, 2022 TIMOTHY RENSHAW
EXPIRES: 12/31/2024

\\BMCD.BURNSMCD.COM\DFS\CLIENTS\ANF\PORTLANDPORT\PDX\153929_FACILITYIMPRV\DESIGN\ELEC\SHEETS\153929E-404.DWG 12/20/2023 10:25 AM JLITTLE

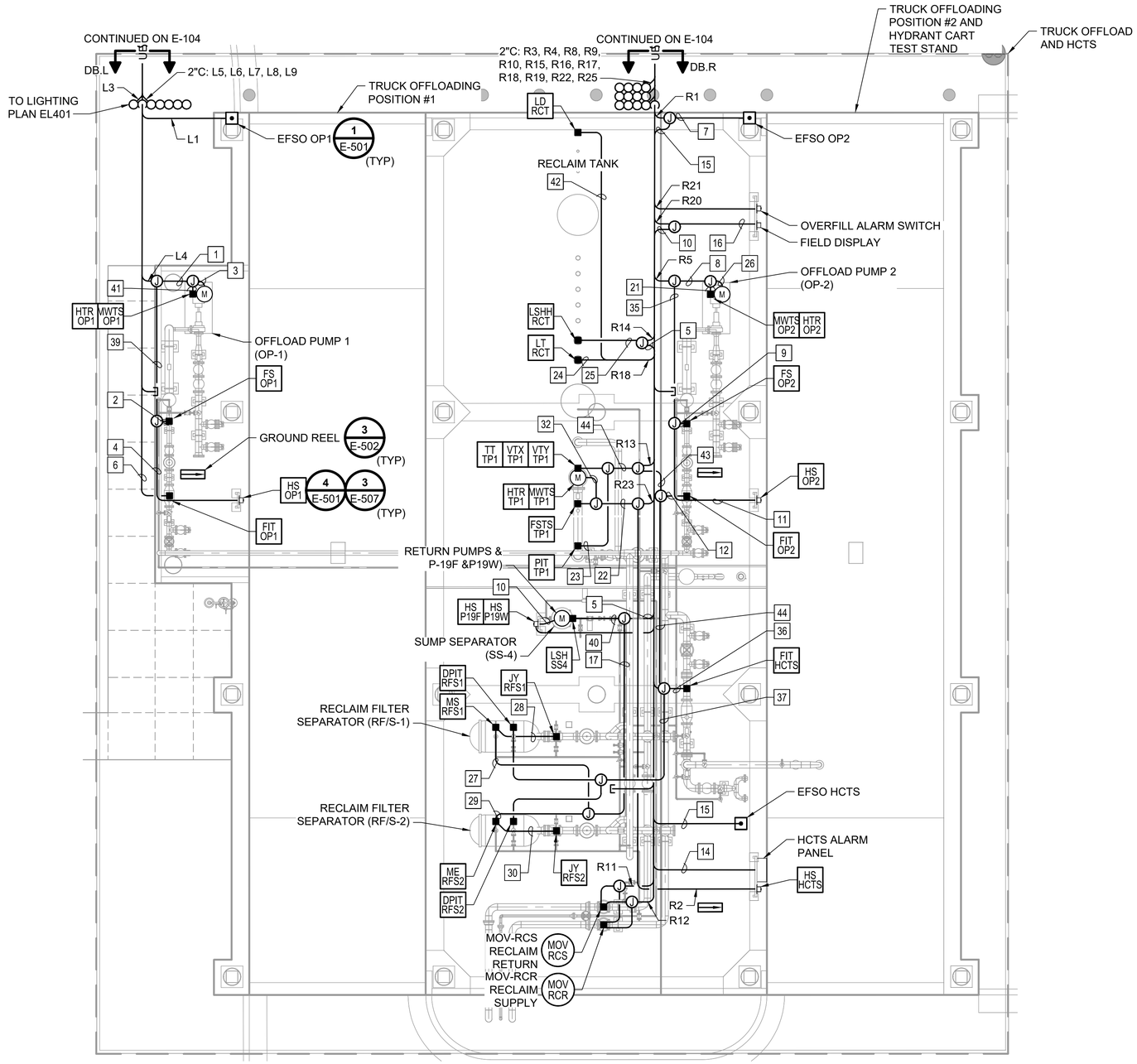

ENLARGED PLAN 1 / E-104

ENLARGED PLAN - 5

0 4' 8' 12'
SCALE IN FEET

NORTH

NOTES:

1. SEE SHEET E-001 FOR GENERAL NOTES, LEGEND AND ABBREVIATIONS.
2. CONDUIT ROUTING IS SCHEMATIC IN NATURE.
3. SEE SHEETS E-301 - E-305 FOR DUCTBANK SECTIONS.
4. INSTRUMENT CALLOUTS ARE APPROXIMATE. REFER TO MECHANICAL DRAWINGS FOR EXACT INSTRUMENT LOCATIONS.

CONDUIT SCHEDULE:

1. 2-1/2"C: P.MCC1.OP1, C.HTR.OP1, C.MWTS.OP1
2. 3/4"C: C.FS.OP1
3. 1-1/2"C: P.MCC1.OP1
4. 3/4"C: C.HS.OP1
5. 1-1/2"C: C.MS.RFS1, C.MSRFS2, C.LSH.SS4
6. 3/4"C: P.FIT.OP1, I.FIT.OP1
7. 3/4"C: C.EFSO.OP2
8. 2-1/2"C: P.MCC1.OP2, C.HTR.OP2, C.MWTS.OP2
9. 3/4"C: C.FS.OP2
10. 1"C: P.PNL6.34
11. 3/4"C: C.HS.OP2
12. 1"C: P.FIT.OP2, I.FIT.OP2
13. NOT USED
14. 1-1/2"C: C.FSC.HCTSAP
15. 3/4"C: C.EFSO.HCTS
16. 3/4"C: P.LP1.11
17. 1-1/2"C: C.MS.RFS1, C.MSRFS2
18. NOT USED
19. NOT USED
20. NOT USED
21. 1"C: C.MWTS.OP2, C.HTR.OP2
22. 2-1/2"C: P.VFDTP1.TP1, C.HTR.TP1, C.MWTS.TP1, C.FSTS.TP1, C.HS.HCTS
23. 3/4"C: I.PT.TP1
24. 2"C: I.LT.RCT
25. 3/4"C: C.LSHH.RCT
26. 1-1/2"C: P.MCC1.OP2
27. 3/4"C: C.MS.RFS1
28. 3/4"C.JY.RFS1
29. 3/4"C: C.MS.RFS2
30. 3/4"C: C.JY.RFS2
31. 3"C: P.VFDTP1.TP1, C.HTR.TP1, C.MWTS.TP1, C.FSTS.TP1, C.HS.HCTS
32. 2-1/2"C: P.VFDTP1.TP1, C.HTR.TP1, C.MWTS.TP1
33. 3/4"C: P.PNL5.25
34. NOT USED
35. 1-1/2"C: C.FS.OP2, C.HS.OP2
36. 1"C: P.FIT.HCTS, I.FIT.HCTS
37. 3/4"C: I.DPIT.RFS1, I.DPIT.RFS2,
38. NOT USED
39. 1-1/2"C: C.FS.OP1, C.HS.OP1
40. 3/4"C: C.LSH.SS4
41. 1"C: C.MWTS.OP1, C.HTR.OP1
42. 3/4"C: IS.TLS.LD.RCT
43. 1-1/2"C: I.FIT.OP2, P.FIT.OP2, P.FIT.HCTS, I.FIT.HCTS, I.DPIT.RFS1, I.DPIT.RFS2
44. 3/4"C: I.PT.TP1, I.TT.TP1, I.VTX.TP1, I.VTY.TP1
45. 1"C: P.FIT.HCTS, I.FIT.HCTS, I.DPIT.RFS1, I.DPIT.RFS2

no.	date	by	ckd	description
A	12/21/23	TSR	BAW	ISSUED FOR PERMIT

ISSUED FOR PERMIT ONLY

BURNS McDONNELL
9400 WARD PARKWAY
KANSAS CITY, MO 64114
816-333-9400
Burns & McDonnell Engineering Co, Inc.

date	detailed
04/24/2023	S. JESBERG
designed	checked
T. RENSHAW	B. WINTER

PDX FUEL COMPANY L.L.C

PORTLAND INTERNATIONAL AIRPORT
5000 NE MARINE DR.
PORTLAND, OREGON 97218

PDX FACILITY IMPROVEMENTS
ENLARGED PLAN - 5

project	contract
153929	

drawing **E-405** rev. **A**

file 153929E-405.dwg

12/20/2023

REGISTERED PROFESSIONAL ENGINEER
100084PE
OREGON
MAY 12, 2006
TIMOTHY RENSHAW
EXPIRES: 12/31/2024

NOTE:

1. SEE SHEET E-001 FOR GENERAL NOTES, LEGEND AND ABBREVIATIONS.
2. LIGHTNING PROTECTION SYSTEM FOR THE CANOPY AND OPERATIONS BUILDING SHALL BE PER NFPA 780, UL 96, UL 96A AND SPECIFICATION 26 41 13.

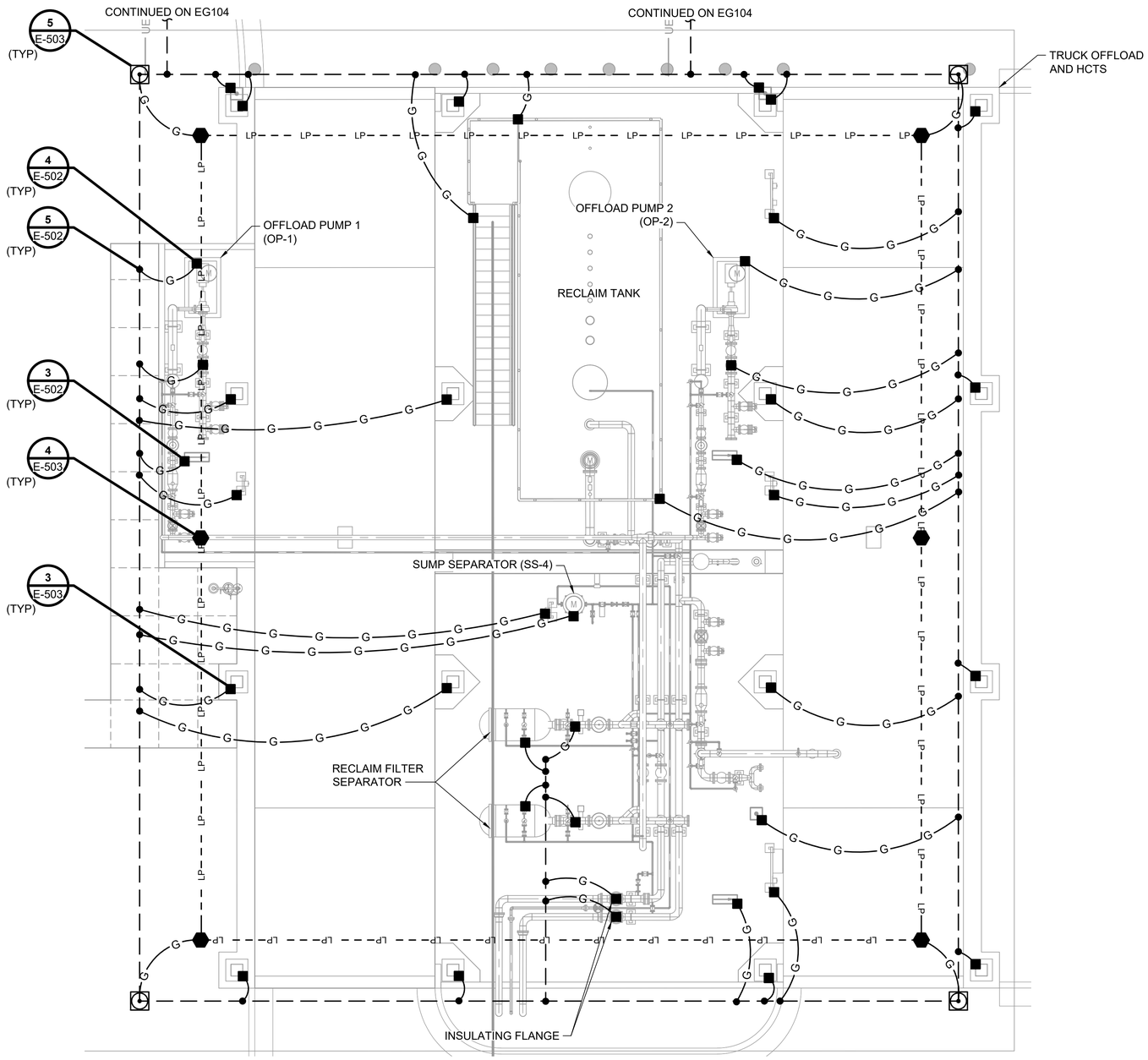

ENLARGED PLAN 1 / EG104

ENLARGED GROUNDING PLAN - OFFLOAD & HCTS

0 4' 8' 12'
SCALE IN FEET

NORTH

12/20/2023

REGISTERED PROFESSIONAL ENGINEER 100064PE OREGON JULY 12, 2022 TIMOTHY RENSHAW

EXPIRES: 12/31/2024

no.	date	by	ckd	description
A	12/21/23	TSR	BAW	ISSUED FOR PERMIT

ISSUED FOR PERMIT ONLY

BURNS McDONNELL
9400 WARD PARKWAY
KANSAS CITY, MO 64114
816-333-9400
Burns & McDonnell Engineering Co, Inc.

date	detailed
04/24/2023	S. JESBERG
designed	checked
T. RENSHAW	B. WINTER

PDX FUEL COMPANY L.L.C

PORTLAND INTERNATIONAL AIRPORT
5000 NE MARINE DR.
PORTLAND, OREGON 97218

PDX FACILITY IMPROVEMENTS
ENLARGED GROUNDING PLAN - OFFLOAD & HCTS

project	contract
153929	

drawing **EG401** rev. **A**

file 153929EG401.dwg

NOTES:

1. SEE SHEET E-001 FOR GENERAL NOTES, LEGEND AND ABBREVIATIONS.
2. SEE SHEET E-509 FOR LIGHTING FIXTURE SCHEDULE.

KEYED NOTE:

1 LIGHTS ARE FURNISHED WITH OPERATIONS BUILDING

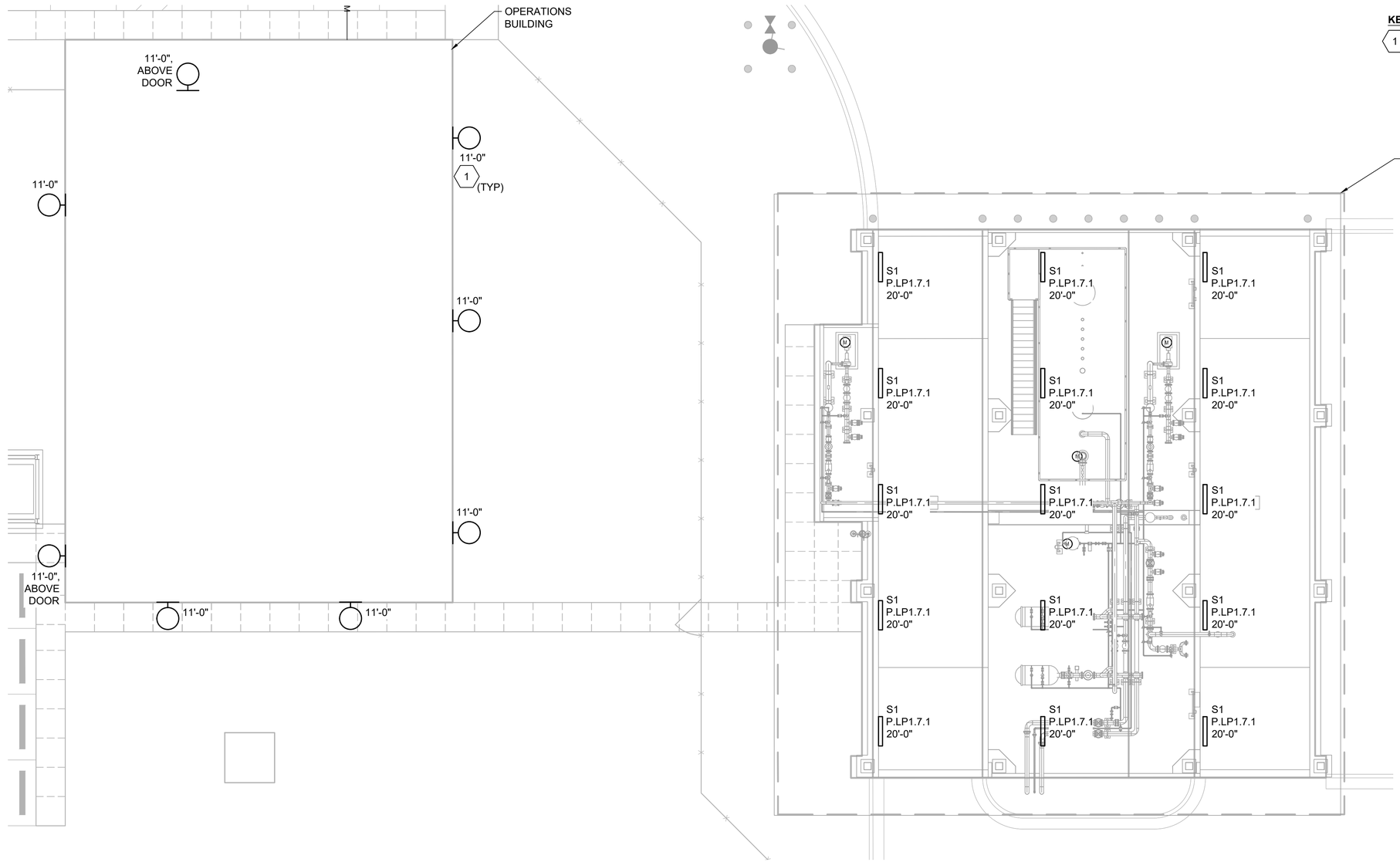

ENLARGED PLAN 1 EL101

ENLARGED LIGHTING PLAN - OPERATIONS BUILDING & OFFLOAD-HCTS

0 4' 8' 16'
SCALE IN FEET

NORTH

no.	date	by	ckd	description
A	12/21/23	TSR	BAW	ISSUED FOR PERMIT

ISSUED FOR PERMIT ONLY

BURNS McDONNELL
9400 WARD PARKWAY
KANSAS CITY, MO 64114
816-333-9400
Burns & McDonnell Engineering Co, Inc.

date	detailed
04/24/2023	S. JESBERG
designed	checked
T. RENSHAW	B. WINTER

PDX FUEL COMPANY L.L.C

PORTLAND INTERNATIONAL AIRPORT
5000 NE MARINE DR.
PORTLAND, OREGON 97218

PDX FACILITY IMPROVEMENTS
ENLARGED LIGHTING PLAN - OPERATIONS BUILDING & OFFLOAD-HCTS

project	contract
153929	

drawing **EL401** rev. **A**

file 153929EL401.dwg

12/20/2023

REGISTERED PROFESSIONAL ENGINEER 100084PE OREGON JULY 12, 2022 TIMOTHY RENSHAW
EXPIRES: 12/31/2024

NOTE:

1. SEE SHEET E-001 FOR GENERAL NOTES, LEGEND AND ABBREVIATIONS.

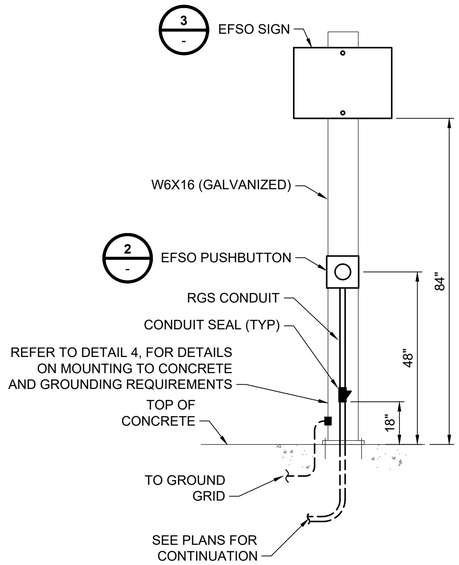

CONCRETE MOUNTED

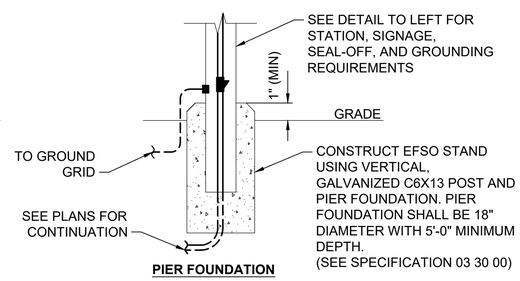

PIER FOUNDATION

NOTES:

1. MOUNTING TO CONCRETE (SEE LEFT DETAIL)
2. PIER FOUNDATION IN NON-PAVED AREA (SEE RIGHT DETAIL).

DETAIL 1 / E-405
EMERGENCY FUEL SHUTOFF STATION
NOT TO SCALE

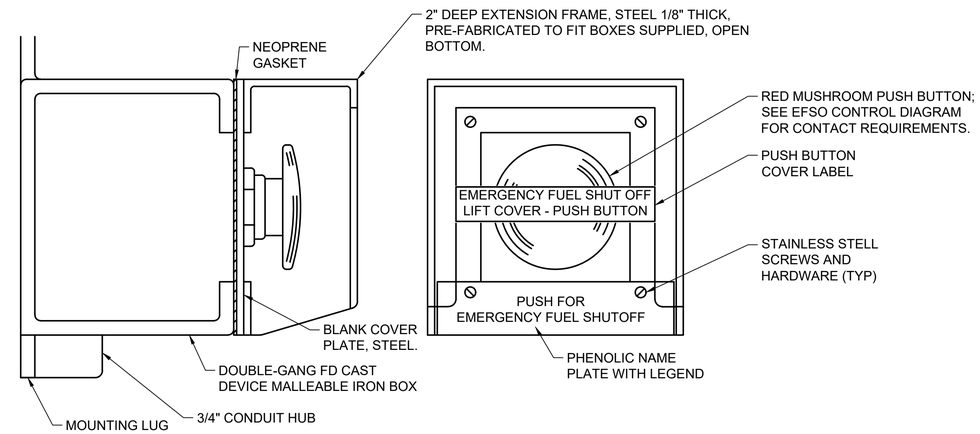

DETAIL 2 / -
EMERGENCY FUEL SHUTOFF PUSHBUTTON
NOT TO SCALE

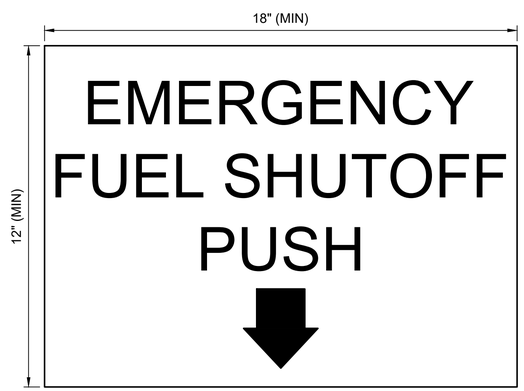

NOTES:

1. SIGN TO BE REFLECTIVE ALUMINUM, 1/16" MINIMUM THICKNESS, SUITABLE FOR EXTERIOR USE.
2. COLORS: LETTERS - WHITE
   BACKGROUND - U.S. STANDARD RED

DETAIL 3 / -
EMERGENCY FUEL SHUTOFF SIGN
NOT TO SCALE

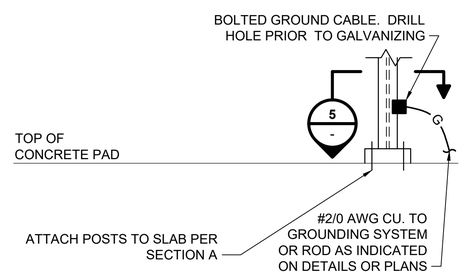

DETAIL 4 / -
TYPICAL CONCRETE PAD FOUNDATION
NOT TO SCALE

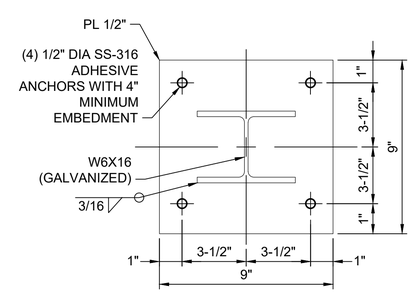

SECTION 5 / -
EQUIPMENT BASE PLATE
NOT TO SCALE

12/20/2023

REGISTERED PROFESSIONAL ENGINEER 100084PE OREGON JULY 12, 2022 TIMOTHY RENSHAW
EXPIRES: 12/31/2024

no.	date	by	ckd	description
A	12/21/23	TSR	BAW	ISSUED FOR PERMIT

ISSUED FOR PERMIT ONLY

BURNS McDONNELL
9400 WARD PARKWAY
KANSAS CITY, MO 64114
816-333-9400
Burns & McDonnell Engineering Co, Inc.

date	detailed
04/24/2023	S. JESBERG
designed	checked
T. RENSHAW	B. WINTER

PDX FUEL COMPANY L.L.C

PORTLAND INTERNATIONAL AIRPORT
5000 NE MARINE DR.
PORTLAND, OREGON 97218

PDX FACILITY IMPROVEMENTS
ELECTRICAL DETAILS - 1

project	contract
153929	

drawing **E-501** rev. **A**

file 153929E-501.dwg

NOTE:

1. SEE SHEET E-001 FOR GENERAL NOTES, LEGEND AND ABBREVIATIONS.

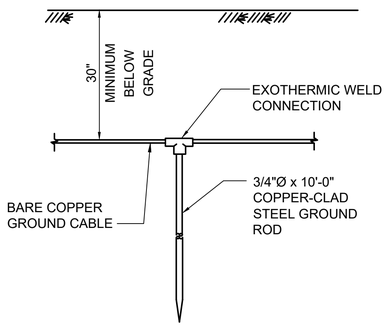

DETAIL 1
GROUND ROD DETAIL
NOT TO SCALE
EG103, E-104, E-106, E-107

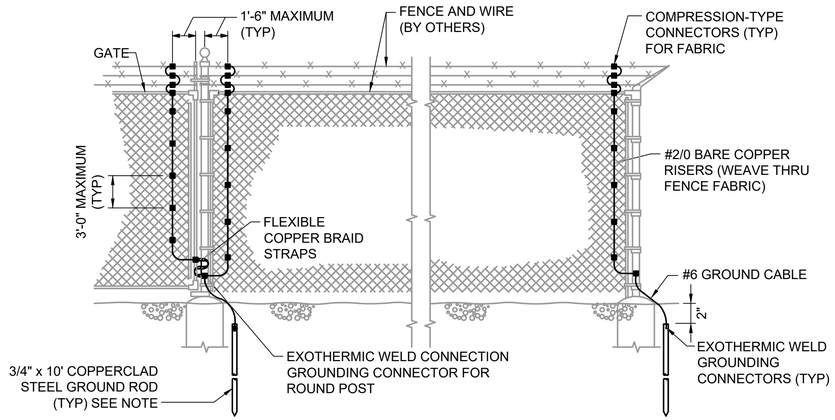

NOTE:

1. PROVIDE AT EACH GATE AND AT ALL CHANGES IN DIRECTION.

DETAIL 2
FENCE GROUNDING
NOT TO SCALE
-

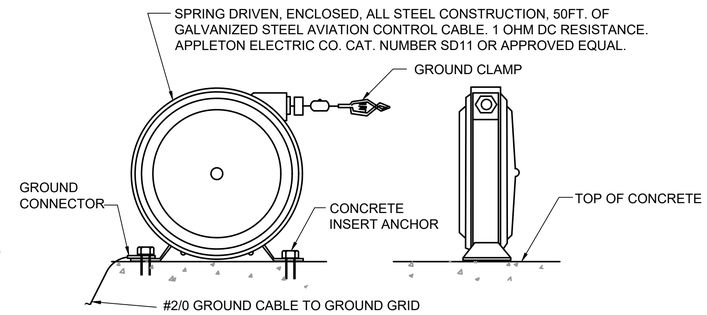

DETAIL 3
STATIC DISCHARGE GROUND REEL
NOT TO SCALE
E-405, EG401

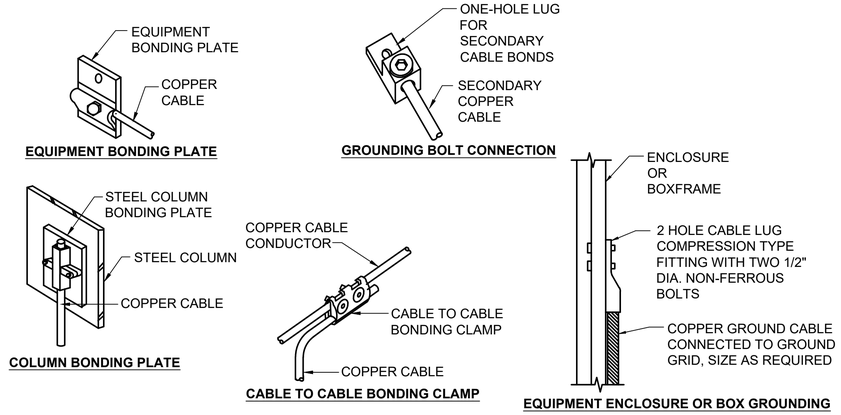

DETAIL 4
TYPICAL BOLTED CONNECTIONS
NOT TO SCALE
EG401

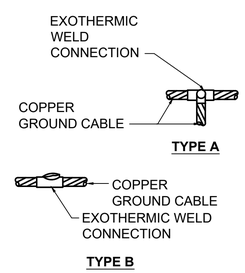

DETAIL 5
TYIPICAL EXOTHERMIC WELD CONNECTIONS
NOT TO SCALE
E-103, E-104, E-106, E-107, EG401

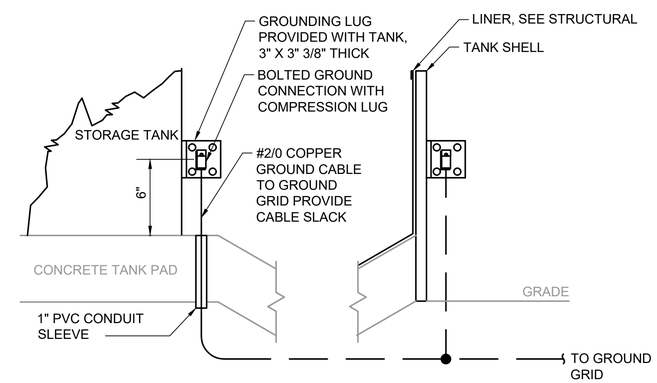

DETAIL 6
STORAGE TANK GROUNDING
NOT TO SCALE
EG106A, EG106, EG107A, EG107

no.	date	by	ckd	description
A	12/21/23	TSR	BAW	ISSUED FOR PERMIT

ISSUED FOR PERMIT ONLY

BURNS McDONNELL
9400 WARD PARKWAY
KANSAS CITY, MO 64114
816-333-9400
Burns & McDonnell Engineering Co, Inc.

date	detailed
04/24/2023	S. JESBERG
designed	checked
T. RENSHAW	B. WINTER

PDX FUEL COMPANY L.L.C

PORTLAND INTERNATIONAL AIRPORT
5000 NE MARINE DR.
PORTLAND, OREGON 97218

PDX FACILITY IMPROVEMENTS
ELECTRICAL DETAILS - 2

project	contract
153929	

drawing **E-502** rev. **A**

file 153929E-502.dwg

12/20/2023

REGISTERED PROFESSIONAL ENGINEER 100084PE OREGON JULY 12, 2021 TIMOTHY RENSHAW
EXPIRES: 12/31/2024

NOTES:

1. SEE SHEET E-001 FOR GENERAL NOTES, LEGEND AND ABBREVIATIONS.

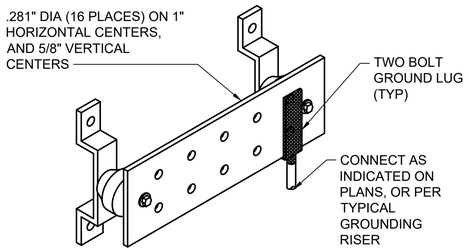

NOTE:

1. TIN PLATED COPPER GROUND BAR WITH WALL MOUNTING BRACKETS AND INSULATORS. DIMENSIONS: 1/4" THICK, 2" HIGH, 10" LENGTH, MOUNT 24" AFF (UON).

DETAIL 1 / EG103
GROUNDING BAR DETAIL
NOT TO SCALE

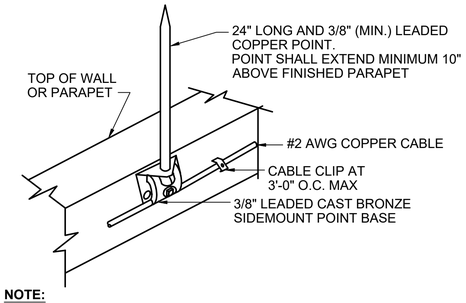

NOTE:

1. AIR TERMINAL TIP SHALL NOT BE LESS THAN 10" ABOVE THE OBJECT/AREA IT IS TO PROTECT. ANY AIR TERMINAL EXCEEDING 24" IN HEIGHT SHALL BE SUPPORTED AT A POINT NOT LESS THAN HALF ITS HEIGHT. ALL MOUNTING HARDWARE SHALL BE STAINLESS STEEL.

DETAIL 2 / -
SIDE MOUNT AIR TERMINAL
NOT TO SCALE

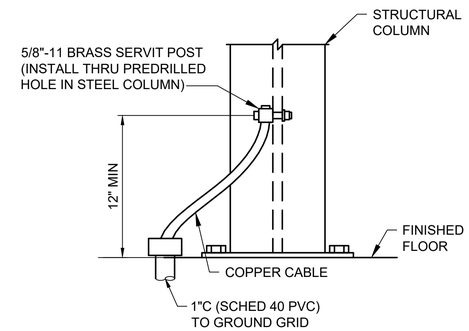

DETAIL 3 / EG103, EG401
STRUCTURAL STEEL GROUND CONNECTION
NOT TO SCALE

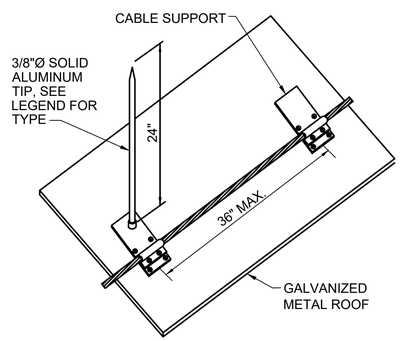

NOTE:

1. AIR TERMINAL TIP SHALL NOT BE LESS THAN 10" ABOVE THE OBJECT/AREA IT IS TO PROTECT. ALL MOUNTING HARDWARE SHALL BE STAINLESS STEEL.

DETAIL 4 / EG103, EG401
FLAT MOUNT AIR TERMINAL
NOT TO SCALE

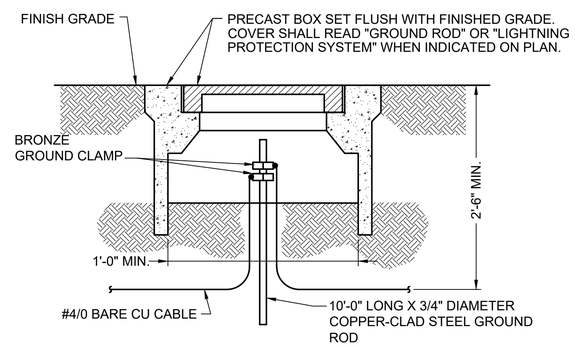

DETAIL 5 / EG103, EG401
GROUND ROD TEST WELL
NOT TO SCALE

no.	date	by	ckd	description
A	12/21/23	TSR	BAW	ISSUED FOR PERMIT

ISSUED FOR PERMIT ONLY

BURNS McDONNELL
9400 WARD PARKWAY
KANSAS CITY, MO 64114
816-333-9400
Burns & McDonnell Engineering Co, Inc.

date	detailed
04/24/2023	S. JESBERG
designed	checked
T. RENSHAW	B. WINTER

PDX FUEL COMPANY L.L.C

PORTLAND INTERNATIONAL AIRPORT
5000 NE MARINE DR.
PORTLAND, OREGON 97218

PDX FACILITY IMPROVEMENTS
ELECTRICAL DETAILS - 3

project	contract
153929	

drawing **E-503** rev. **A**

file 153929E-503.dwg

12/20/2023

REGISTERED PROFESSIONAL ENGINEER 100084PE OREGON JULY 12, 2022 TIMOTHY RENSHAW
EXPIRES: 12/31/2024

NOTES:

1. SEE SHEET E-001 FOR GENERAL NOTES, LEGEND AND ABBREVIATIONS.

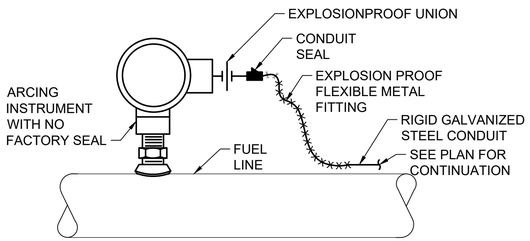

NOTES:

1. THIS DETAIL APPLIES TO INSTRUMENTS INSTALLED ON TANKS NEAR MANWAYS AND HATCHES.
2. LIST OF ARCING INSTRUMENTS AND INSTRUMENTS WITH PROCESS SEAL:
   - SOLENOID CONTROL VALVE
   - FLOW SWITCH
   - FILTER/SEPARATOR SUMP WATER DETECTION ELECTRONICS BOX
   - CONTROL STATION HAND SWITCHES

DETAIL 1 / -

TYPICAL CLASS I, DIVISION 1, GROUP D ARCING INSTRUMENT ASSEMBLY

NOT TO SCALE

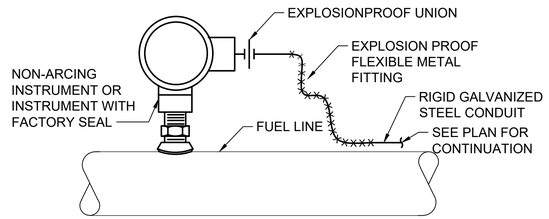

NOTES:

1. TRANSMITTER MUST BE LABELED AS FACTORY SEALED ON NAMEPLATE.
2. LIST OF FACTORY SEALED OR NON-ARCING INSTRUMENTS:
   - INTRINSICALLY SAFE FILTER/SEPARATOR WATER DETECTION DEVICE
   - PRESSURE TRANSMITTER
   - FLOW TRANSMITTER
   - TEMPERATURE TRANSMITTER
   - RESISTANCE TEMPERATURE DEVICE

DETAIL 2 / -

TYPICAL CLASS I, DIVISION 1, GROUP D NON ARCING INSTRUMENT OR INSTRUMENT ASSEMBLY WITH FACTORY SEAL

NOT TO SCALE

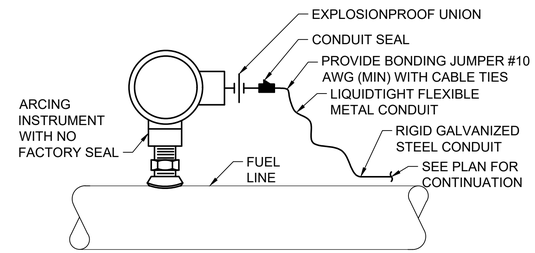

NOTES:

1. LIST OF ARCING INSTRUMENTS AND INSTRUMENTS WITH PROCESS SEAL:
   - SOLENOID CONTROL VALVE
   - FLOW SWITCH
   - FILTER/SEPARATOR SUMP WATER DETECTION ELECTRONICS BOX
   - CONTROL STATION HAND SWITCHES

DETAIL 3 / E-505

TYPICAL CLASS I, DIVISION 2, GROUP D ARCING INSTRUMENT ASSEMBLY

NOT TO SCALE

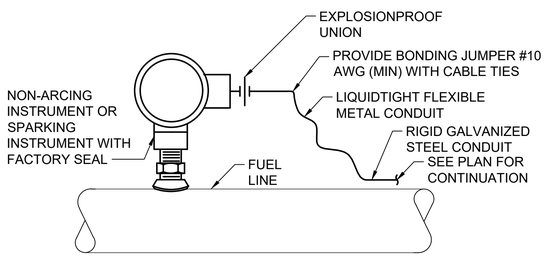

NOTES:

1. TRANSMITTER MUST BE LABELED AS FACTORY SEALED ON NAMEPLATE.
2. LIST OF FACTORY SEALED OR NON-ARCING INSTRUMENTS:
   - INTRINSICALLY SAFE FILTER/SEPARATOR WATER DETECTION DEVICE
   - PRESSURE TRANSMITTER
   - FLOW TRANSMITTER
   - TEMPERATURE TRANSMITTER
   - RESISTANCE TEMPERATURE DEVICE

DETAIL 4 / E-507

TYPICAL CLASS I, DIVISION 2, GROUP D NON ARCING INSTRUMENT OR INSTRUMENT ASSEMBLY WITH FACTORY SEAL

NOT TO SCALE

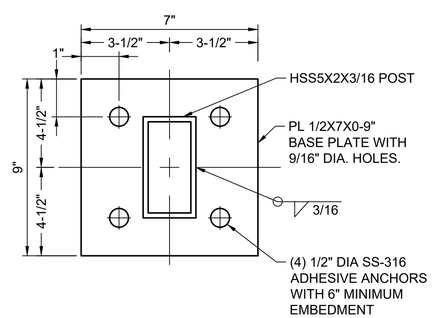

SECTION 5 / -

RACK SUPPORT BASE

NOT TO SCALE

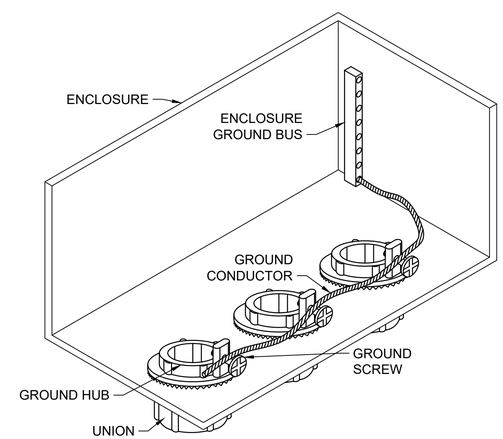

DETAIL 6 / -

TYPICAL CONDUIT DETAIL CONNECTION TO ENCLOSURE

NOT TO SCALE

no.	date	by	ckd	description
A	12/21/23	TSR	BAW	ISSUED FOR PERMIT

ISSUED FOR PERMIT ONLY

BURNS McDONNELL
9400 WARD PARKWAY
KANSAS CITY, MO 64114
816-333-9400
Burns & McDonnell Engineering Co, Inc.

date	detailed
04/24/2023	S. JESBERG
designed	checked
T. RENSHAW	B. WINTER

PDX FUEL COMPANY L.L.C

PORTLAND INTERNATIONAL AIRPORT
5000 NE MARINE DR.
PORTLAND, OREGON 97218

PDX FACILITY IMPROVEMENTS

ELECTRICAL DETAILS - 4

12/20/2023

REGISTERED PROFESSIONAL ENGINEER 100084PE OREGON JULY 12, 2022 TIMOTHY RENSHAW

EXPIRES: 12/31/2024

project	contract
153929	

drawing **E-504** rev. **A**

file 153929E-504.dwg

NOTES:

1. SEE SHEET E-001 FOR GENERAL NOTES, LEGEND AND ABBREVIATIONS.

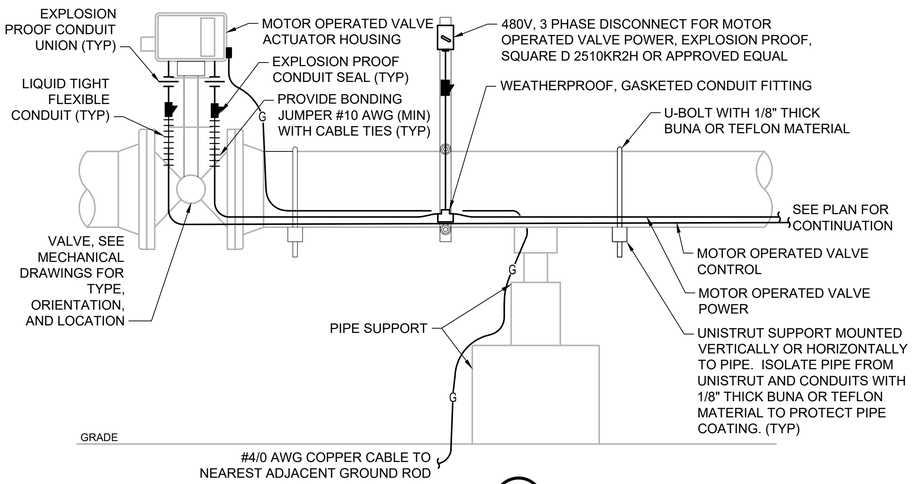

DETAIL 1 / -
TYPICAL MOTOR OPERATED VALVE
NOT TO SCALE

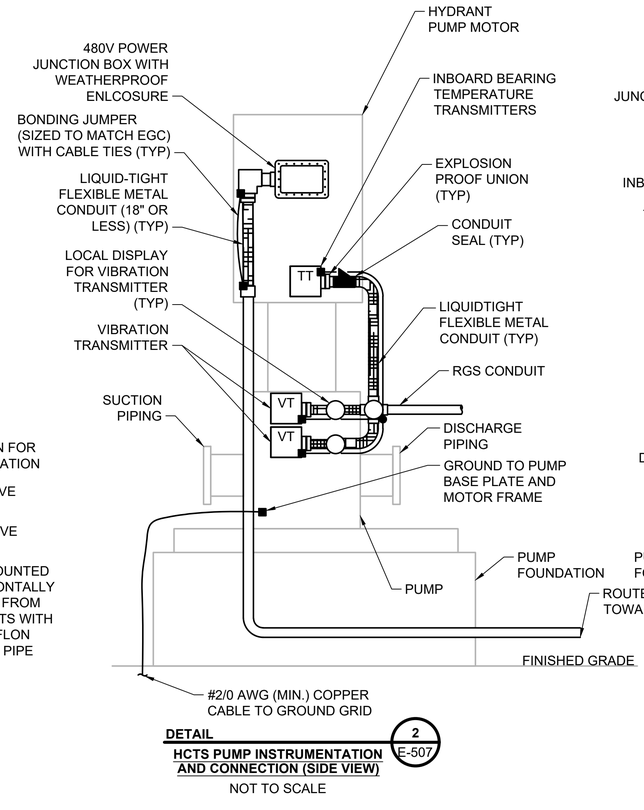

DETAIL 2 / E-507
HCTS PUMP INSTRUMENTATION AND CONNECTION (SIDE VIEW)
NOT TO SCALE

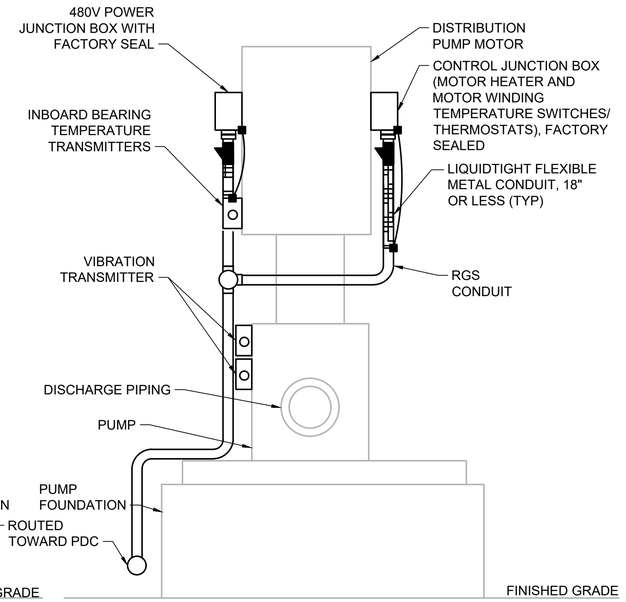

DETAIL 3 / E-507
HCTS PUMP INSTRUMENTATION AND CONNECTION (FRONT VIEW)
NOT TO SCALE

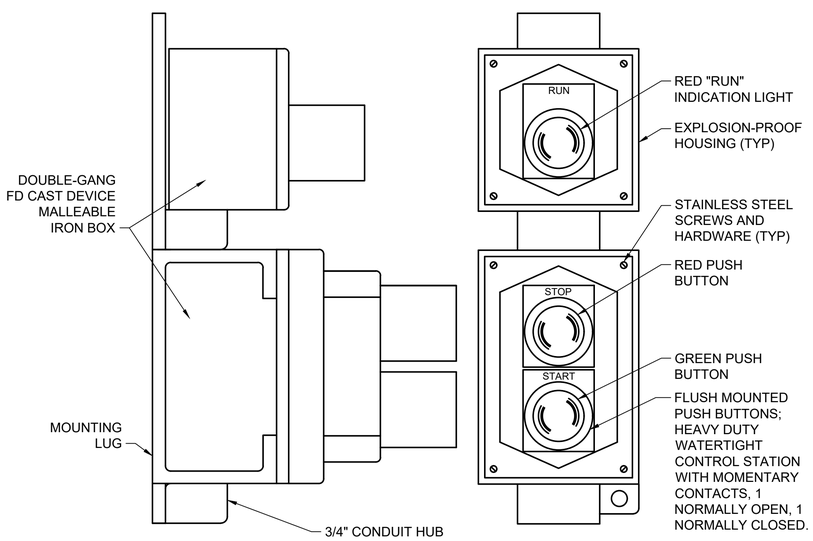

NOTE:

1. STATION SHALL BE A FULLY ASSEMBLED FACTORY SEALED, HEAVY DUTY, COMBINATION PUSHBUTTON AND PILOT LIGHT STATION, EXPLOSION PROOF RATED FOR CLASS I, DIVISION 1 & 2, GROUP D.

DETAIL 4 / -
PUMP PUSHBUTTON & PILOT LIGHT
NOT TO SCALE

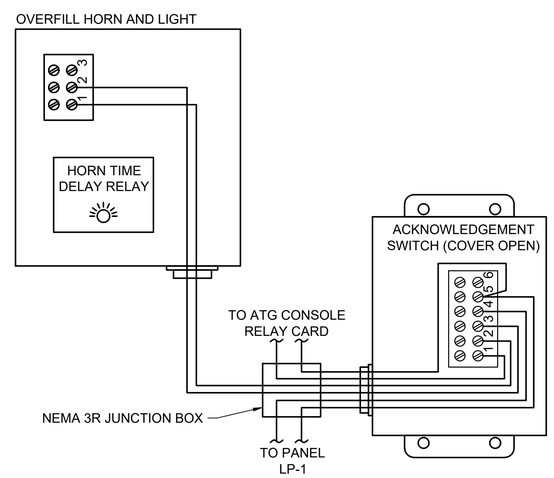

DETAIL 5 / -
OVERFILL AND ACKNOWLEDGMENT ALARM SWITCH
NOT TO SCALE

12/20/2023

REGISTERED PROFESSIONAL ENGINEER 100084PE OREGON JULY 12, 2022 TIMOTHY RENSHAW
EXPIRES: 12/31/2024

no.	date	by	ckd	description
A	12/21/23	TSR	BAW	ISSUED FOR PERMIT

ISSUED FOR PERMIT ONLY

BURNS McDONNELL
9400 WARD PARKWAY
KANSAS CITY, MO 64114
816-333-9400
Burns & McDonnell Engineering Co, Inc.

date	detailed
04/24/2023	S. JESBERG
designed	checked
T. RENSHAW	B. WINTER

PDX FUEL COMPANY L.L.C

PORTLAND INTERNATIONAL AIRPORT
5000 NE MARINE DR.
PORTLAND, OREGON 97218

PDX FACILITY IMPROVEMENTS
ELECTRICAL DETAILS - 5

project	contract
153929	

drawing **E-505** rev. **A**

file 153929E-505.dwg

NOTES:

1. SEE SHEET E-001 FOR GENERAL NOTES, LEGEND AND ABBREVIATIONS.
2. REFER TO SHEET E-604 AND E-605 FOR ADDITIONAL DETAILS AND THE EFSO WIRING DIAGRAM.
3. PANEL WAS FURNISHED IN PDX FACILITY UPGRADE PROJECT (2023) PROJECT. REFER TO AS-BUILT CONSTRUCTION DOCUMENTS FOR FURTHER INFORMATION SUCH AS DETAILED WIRING. FABRICATION OF PANEL WAS PERFORMED BY ATGI, ATGI PROJECT NUMBER 34-39, WORK ORDER 22654.8010, DRAWING INDEX PDX-G-003).

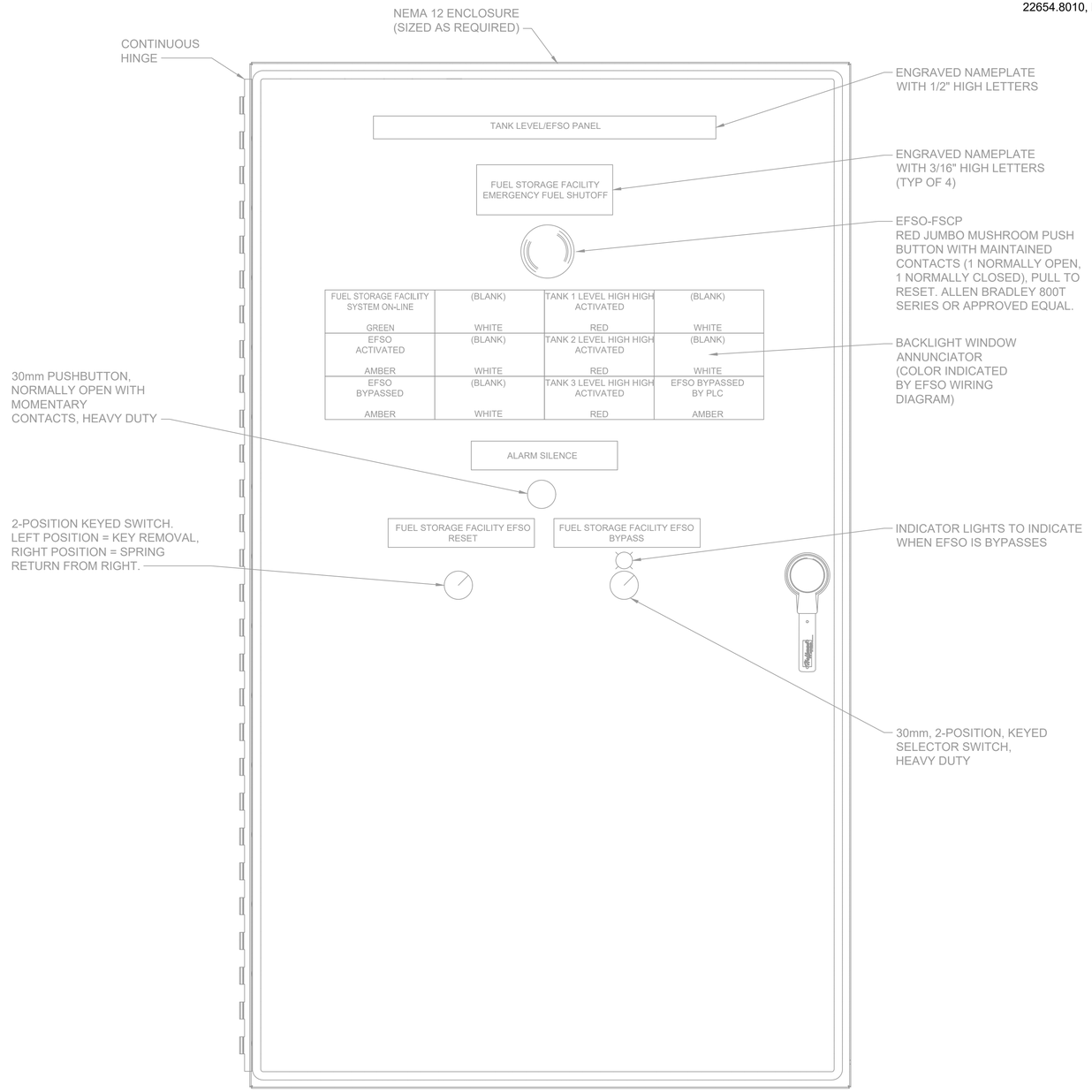

DETAIL 1 / -

FUEL FACILITY TANK LEVEL/EFSO PANEL

NOT TO SCALE

no.	date	by	ckd	description
A	12/21/23	TSR	BAW	ISSUED FOR PERMIT

ISSUED FOR PERMIT ONLY

BURNS McDONNELL
9400 WARD PARKWAY
KANSAS CITY, MO 64114
816-333-9400
Burns & McDonnell Engineering Co, Inc.

date	detailed
04/24/2023	S. JESBERG
designed	checked
T. RENSHAW	B. WINTER

PDX FUEL COMPANY L.L.C

PORTLAND INTERNATIONAL AIRPORT
5000 NE MARINE DR.
PORTLAND, OREGON 97218

PDX FACILITY IMPROVEMENTS

ELECTRICAL DETAILS - 6

project	contract
153929	

drawing **E-506** rev. **A**

file 153929E-506.dwg

12/20/2023

REGISTERED PROFESSIONAL ENGINEER 100084PE OREGON JULY 12, 2021 TIMOTHY RENSHAW

EXPIRES: 12/31/2024

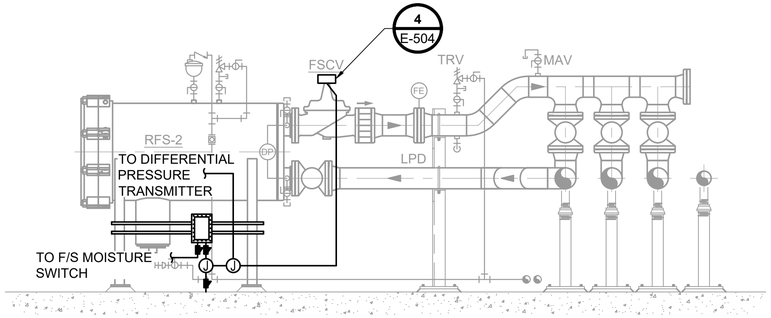

NOTE:
1. CONDUITS SHALL BE PER PLAN DRAWINGS

DETAIL 1/-
RECLAIM FILTER SEPARATOR CROSS SECTION (TYPICAL)
NOT TO SCALE

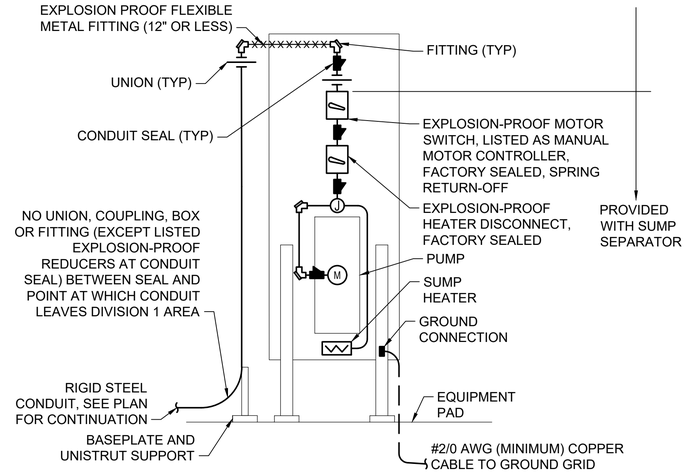

DETAIL 2/-
TYPICAL SUMP SEPARATOR
NOT TO SCALE

NOTES:

1. SEE SHEET E-001 FOR GENERAL NOTES, LEGEND AND ABBREVIATIONS.

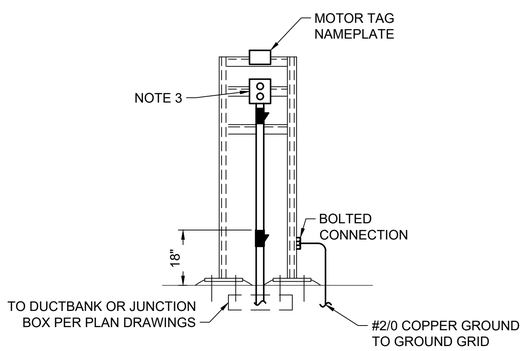

NOTES:

1. EQUIPMENT SHOWN AS REFERENCE. INSTALL EQUIPMENT AS INDICATED ON PLAN.
2. PROVIDE MOTOR TAG NAMEPLATE FOR PUSHBUTTON TO INDICATE FUNCTION.
3. EXPLOSION PROOF START (GREEN)/STOP (RED) PUSHBUTTON, SEE DETAIL 5 ON DWG E-505 FOR ADDITIONAL INFORMATION. RUN INDICATION LIGHT MAY BE REQUIRED, SEE MOTOR STARTER WIRING DIAGRAM.

DETAIL 3/-
TYPICAL MOTOR START/STOP PUSHBUTTON
NOT TO SCALE

no.	date	by	ckd	description
A	12/21/23	TSR	BAW	ISSUED FOR PERMIT

ISSUED FOR PERMIT ONLY

BURNS McDONNELL
9400 WARD PARKWAY
KANSAS CITY, MO 64114
816-333-9400
Burns & McDonnell Engineering Co, Inc.

date	detailed
04/24/2023	S. JESBERG
designed	checked
T. RENSHAW	B. WINTER

PDX FUEL COMPANY L.L.C

PORTLAND INTERNATIONAL AIRPORT
5000 NE MARINE DR.
PORTLAND, OREGON 97218

PDX FACILITY IMPROVEMENTS
ELECTRICAL DETAILS - 7

project	contract
153929	

drawing **E-507** rev. **A**

file 153929E-507.dwg

12/20/2023

REGISTERED PROFESSIONAL ENGINEER 100084PE OREGON JULY 12, 2022 TIMOTHY RENSHAW
EXPIRES: 12/31/2024

Scale For Microfilming: Millimeters / Inches

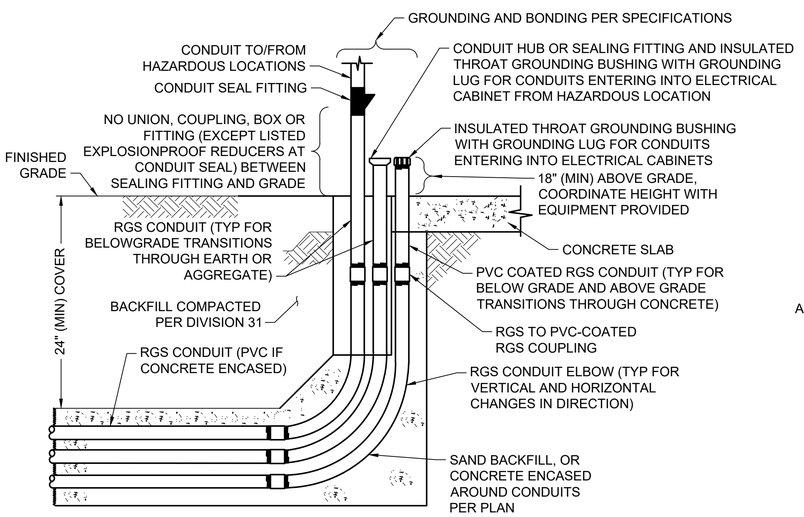

DETAIL 1
TYPICAL DUCTBANK RISER
NOT TO SCALE

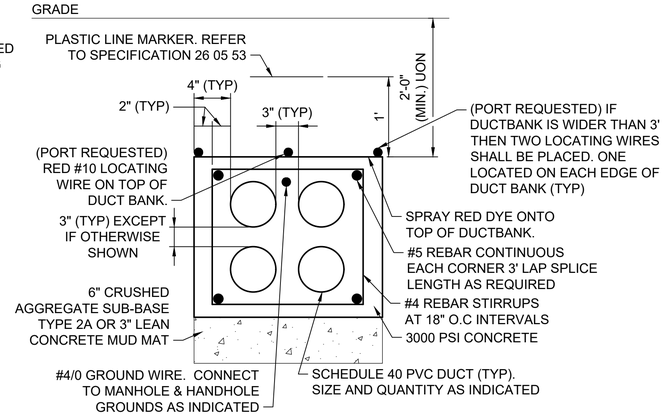

NOTE:
1. PROVIDE SIZE AND NUMBER OF CONDUITS AS INDICATED ON PLAN VIEWS OR ON THE DUCTBANK SECTIONS MAINTAINING 4 INCHES OF CONCRETE AROUND THE OUTSIDE CONDUITS AND 3 INCHES BETWEEN CONDUITS.
2. BACKFILL ONLY AFTER CONCRETE HAS ATTAINED 70% DESIGN STRENGTH.

DETAIL 2
TYPICAL REINFORCED CONCRETE ENCASED DUCTBANK CONSTRUCTION
NOT TO SCALE

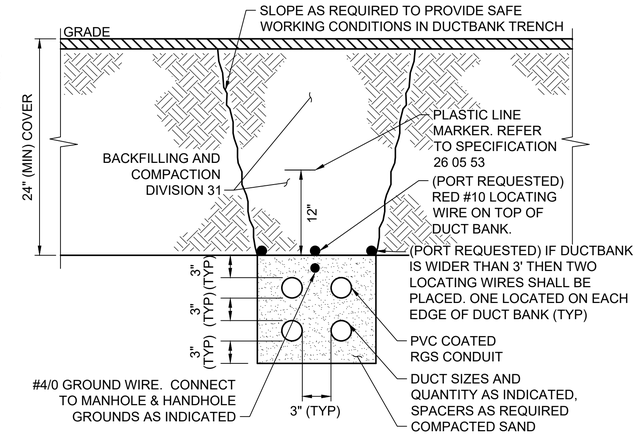

DETAIL 3
TYPICAL DIRECT BURIED CONDUIT DUCTBANK INSTALLATION DETAIL
NOT TO SCALE

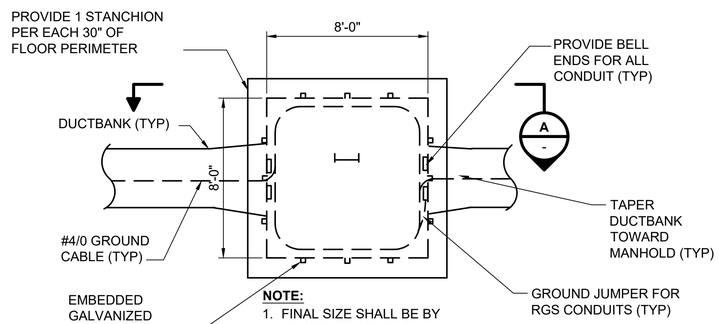

NOTE:
1. FINAL SIZE SHALL BE BY SUBCONTRACTOR

DETAIL 4
MANHOLE DETAIL
NOT TO SCALE
E-104
EG103
EG104A
EG104

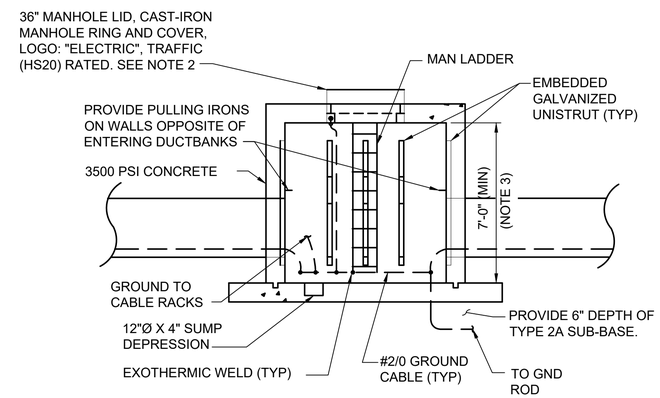

NOTES:
1. STRUCTURE SHALL BE DESIGNED FOR TRAFFIC (HS2O) LOADING AS WELL AS LOADING CRITERIA ON S-001 AND BUOYANCY CONDITIONS WITH WATER AT GRADE. SUBMIT SEALED DESIGN CALCULATIONS AND SHOP DRAWINGS BY STRUCTURAL ENGINEER FOR APPROVAL.
2. PROVIDE RISER AS REQUIRED TO ENSURE ENTIRE MANHOLE CONCRETE TOP IS AT GRADE OR BELOW. SEE CIVIL DRAWINGS FOR MORE INFORMATION ON ELEVATIONS OF MANHOLE TOPS AND RISERS.
3. SEE CIVIL DRAWINGS FOR ACTUAL DEPTH.
4. PROVIDE 3 PULLING EYES.
5. MAINTAIN SPACING BETWEEN POWER AND CONTROL CIRCUITS. SEE SPECS AND DUCTBANK CROSS SECTIONS FOR DIMENSIONS.
6. DESIGN STRUCTURES TO BE WATERTIGHT. SEE DIVISION 7 FOR EXTERIOR WATERPROOFING.

SECTION A
TYPICAL MANHOLE DETAIL
NOT TO SCALE

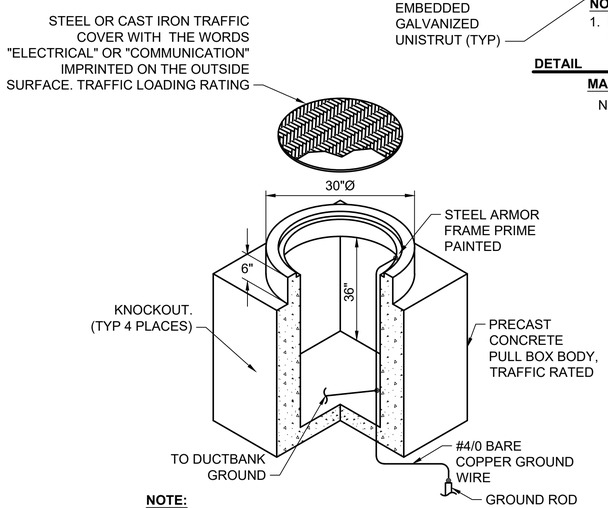

NOTE:
1. STRUCTURE SHALL BE SUITABLE FOR TRAFFIC (H2O) LOADING.

DETAIL 6
HANDHOLE DETAIL
NOT TO SCALE
E-104
EG104

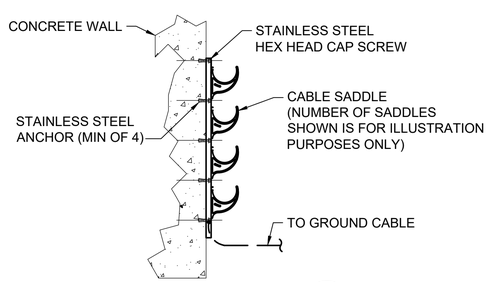

DETAIL 5
TYPICAL HANDHOLE CABLE RACK DETAIL
NOT TO SCALE

no.	date	by	ckd	description
A	12/21/23	TSR	BAW	ISSUED FOR PERMIT

ISSUED FOR PERMIT ONLY

BURNS McDONNELL
9400 WARD PARKWAY
KANSAS CITY, MO 64114
816-333-9400
Burns & McDonnell Engineering Co, Inc.

date	detailed
04/24/2023	S. JESBERG
designed	checked
T. RENSHAW	B. WINTER

PDX FUEL COMPANY L.L.C

PORTLAND INTERNATIONAL AIRPORT
5000 NE MARINE DR.
PORTLAND, OREGON 97218

PDX FACILITY IMPROVEMENTS
ELECTRICAL DETAILS - 8

project	contract
153929	

drawing **E-508** rev. **A**

file 153929E-508.dwg

12/20/2023

REGISTERED PROFESSIONAL ENGINEER 10006PE OREGON JANUARY 12, 2023 TIMOTHY RENSHAW
EXPIRES: 12/31/2024

\\BMCD.BURNSMCD.COM\DFS\CLIENTS\ANF\PORTLANDPORT\PDX\153929_FACILITYIMPRV\DESIGN\ELEC\SHEETS\153929E-508.DWG 12/20/2023 9:06 AM JLITTLE

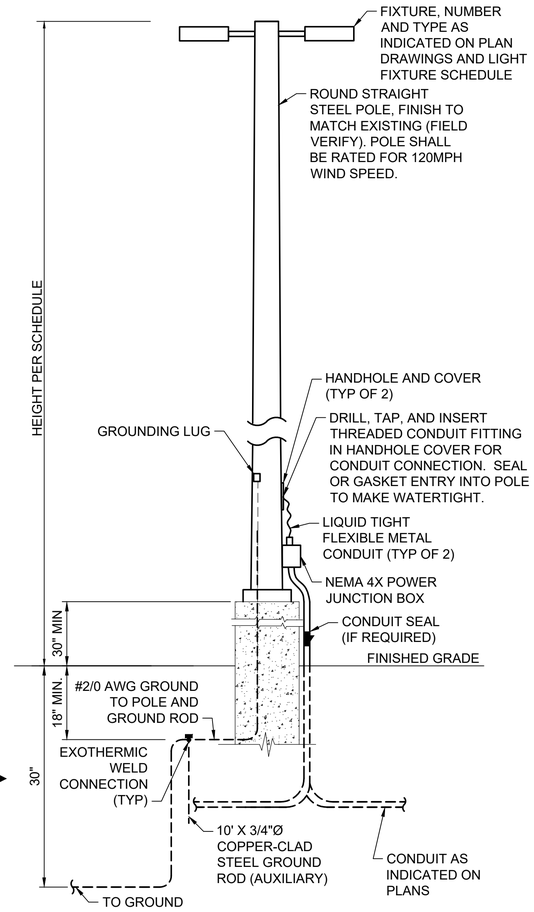

NOTES:

1. SEE STRUCTURAL DRAWINGS FOR POLE FOUNDATION DETAILS.
2. PERFORM SPLICES IN LIGHT POLE HANDHOLE ONLY.
3. ALL LUMINAIRE MOUNTING HARDWARE SHALL MATCH COLOR OF LUMINAIRES AND POLES.

DETAIL 1
AREA LIGHT - PIER FOUNDATION MOUNTED
NOT TO SCALE
E-103, E-104, EL101, EG103, EG104

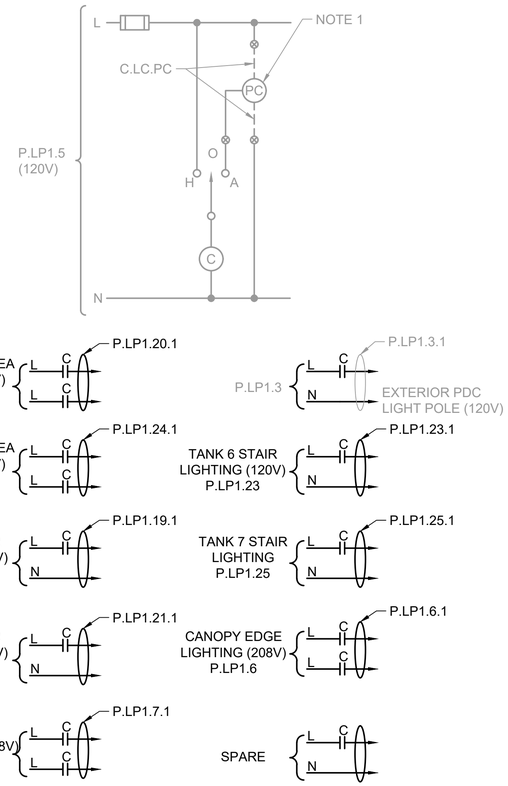

NOTE:

1. EXITING PHOTOCELL IS MOUNTED TO EXTERIOR OF PDC.
2. MODIFY LIGHTING CONTACTOR PANEL TO HAVE MINIMUM OF 20 CONTACTORS.

DETAIL 2
CONTROL DIAGRAM - LIGHTING CONTACTOR
NOT TO SCALE

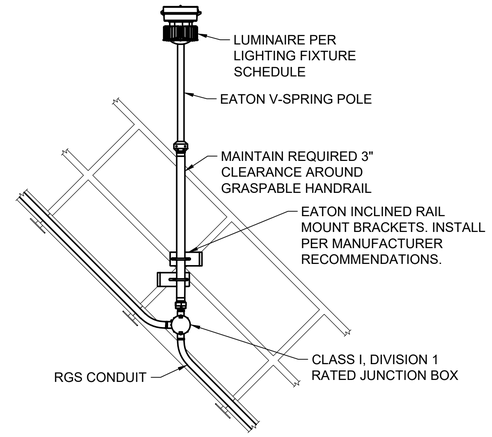

DETAIL 3
STANCHION MOUNTED LIGHT POLE - STAIR RAILING
NOT TO SCALE
E-104, E-106, E-107, EL101

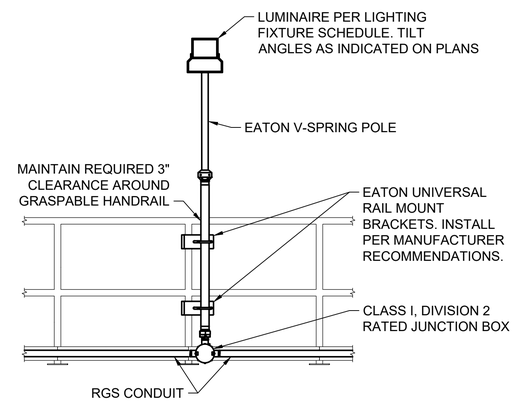

DETAIL 4
STANCHION MOUNTED LIGHT POLE - PLATFORM RAILING
NOT TO SCALE
E-104, E-106, E-107, EL101

NOTES:

1. THE DESIGN BASIS ILLUSTRATES THE PHYSICAL, OPTICAL, AND ELECTRICAL ATTRIBUTES REQUIRED. ALTERNATIVE FIXTURES BY OTHER MANUFACTURER ARE ALLOWABLE IF THEY SATISFY THE DETAILS AND SPECIFICATIONS, AND THE PHYSICAL, OPTICAL, AND ELECTRICAL ATTRIBUTES OF THE DESIGN BASIS IDENTIFIED IN THESE SCHEDULES. ALTERNATIVE FIXTURES SHALL NOT BE ORDERED PRIOR TO APPROVAL BY THE CONTRACTOR. SEE REMARKS REGARDING SPECIFIC OPTIONS TO INCORPORATE (FOR EXAMPLE, WHERE EMERGENCY BATTERY BACKUP IS REQUIRED BY BEING LABELED "EMERGENCY" OR "E" BUT OMITTED FROM THE CATALOG NUMBER, AN EMERGENCY BALLAST/DRIVER SHALL BE PROVIDED FOR SUCH FIXTURE).
2. THE MINI8MUM CRI FOR ALL LED LAMPS SHALL BE 70.
3. ALL FIXTURES, LAMPS, DRIVERS, AND BALLASTS SHALL BE RATED FOR STARTING AT ZERO DEGREES FAHRENHEIT UNLESS OTHERWISE NOTED.
4. ALL BALLASTS/DRIVERS INCLUDING EMERGENCY BALLASTS/DRIVERS SHALL BE INTEGRAL TO THE FIXTURE AND SHALL BE FACTORY INSTALLED UNLESS OTHERWISE NOTED.
5. ALL FIXTURES SHALL BE FACTORY PREWIRED WITH HIGH TEMPERATURE WIRE, AND SHALL BE COMPLETELY ASSEMBLED AND TESTED PRIOR TO SHIPMENT.
6. FIXTURES SHALL BE COMPATIBLE WITH THE CEILING TYPE IN WHICH THEY ARE INSTALLED. RECESSED FIXTURES INSTALLED IN PLASTER CEILINGS SHALL INCLUDE PLASTER FRAMES.
7. LAMPS AND FIXTURES CONNECTED TO DIMMING BALLASTS/DRIVERS SHALL BE OPERATED AT FULL OUTPUT FOR NO LESS THAN 100 HOURS PRIOR TO DIMMING.
8. ALL REFERENCES TO SPACING AND MOUNTING HEIGHTS ARE MEASURED FROM THE FIXTURE CENTERLINE UNLESS OTHERWISE NOTED.
9. FIXTURE QUANTITIES LISTED IN SCHEDULES ARE PROVIDED AS A COURTESY BASED ON THE LAYOUT AT TIME OF AWARD. VERIFY QUANTITIES BASED ON THE FIXTURES SHOWN ON THE LIGHTING PLANS.

LIGHTING FIXTURE SCHEDULE

FIXTURE TYPE	WATTAGE	VOLTAGE	LUMENS	LOAD	LAMP TYPE	MOUNTING	DESCRIPTION	MANUFACTURER	QTY (NOTE 10)
A1	113W	480V	15183 lm	125.56VA	LED	POLE MOUNTED, 30'-0" POLE. ANGLED TOWARD GROUND AS INDICATED ON PLANS.	LED FLOODLIGHT, CLASS I DIVISION II, HAZARDOUS LOCATION RATED, GRAY POLYESTER POWDER PAINTED ALUMINUM	CROUSE-HINDS (FMVA15LCY-UNV34-76)	1 POLE, 3 FIXTURES
A2	113W	208V	15183 lm	125.56VA	LED	POLE MOUNTED ON TANK RAILING AS INDICATED ON PLANS, 6'-0" POLE. ANGLED TOWARD GROUND AS INDICATED ON PLANS.	LED FLOODLIGHT, CLASS I DIVISION II, HAZARDOUS LOCATION RATED, GRAY POLYESTER POWDER PAINTED ALUMINUM	CROUSE-HINDS (FMV15LCY-UNV1-76)	21 POLES, 21 FIXTURES
A3	45W	120V	5537 lm	47.78VA	LED	STANCHION POLE MOUNTED, 25° ANGLED MOUNT	CLASS I DIVISION II, HAZARDOUS LOCATION RATED, EPOXY POWDER COATED ALUMINUM, IMPACT RESISTANT GLASS	CROUSE-HINDS (VMVL-5-N-J-UNV1)	9 POLES, 9 FIXTURES
A5	140W	480V	20000 lm	155.56VA	LED	POLE MOUNTED, 30'-0" POLE	LED OUTDOOR AREA LIGHT, TYPE IV DISTRIBUTION, BLACK POLYESTER POWDER PAINTED ALUMINUM	GE EVOLVE EALS03EH4AF740XAD1BLCK	14 POLES, 16 FIXTURES
B1	22W	208V	2950 lm	24.44VA	LED	WALL	LED WALL MOUNTED LIGHT, POWDER COAT FINISH, RATED FOR OUTDOOR USE	LITHONIA LIGHTING (TWX1 LED ALO 50K MVOLT PE DDBTXD)	7 FIXTURES
OB1	44W	120			LED	1" NPT CONDUIT MOUNTED	CLASS I DIVISION II, HAZARDOUS LOCATION RATED, EXTERIOR, CONDUIT MOUNTED, SINGLE HEAD FAA APPROVED L-810 RED OBSTRUCTION LIGHT	DIALIGHT (860-2R01-001)	6 FIXTURES
S1	60W	208V	8300 lm	66.44VA	LED	CEILING	4' LINEAR LED, CLASS I, DIVISION 1 HAZARDOUS LOCATION RATED, ALUMINUM HOUSING	CROUSE-HINDS (XPLAN4-UNV1-S917)	15 FIXTURES

12/20/2023
REGISTERED PROFESSIONAL ENGINEER
TIMOTHY RENSHAW
OREGON
JULY 12, 2022
EXPIRES: 12/31/2024

no.	date	by	ckd	description
A	12/21/23	TSR	BAW	ISSUED FOR PERMIT

ISSUED FOR PERMIT ONLY

BURNS McDONNELL
9400 WARD PARKWAY
KANSAS CITY, MO 64114
816-333-9400
Burns & McDonnell Engineering Co, Inc.

date	detailed
04/24/2023	S. JESBERG
designed	checked
T. RENSHAW	B. WINTER

PDX FUEL COMPANY L.L.C

PORTLAND INTERNATIONAL AIRPORT
5000 NE MARINE DR.
PORTLAND, OREGON 97218

PDX FACILITY IMPROVEMENTS
ELECTRICAL DETAILS - 9

project	contract
153929	
drawing	rev.
E-509	A

file 153929E-509.dwg

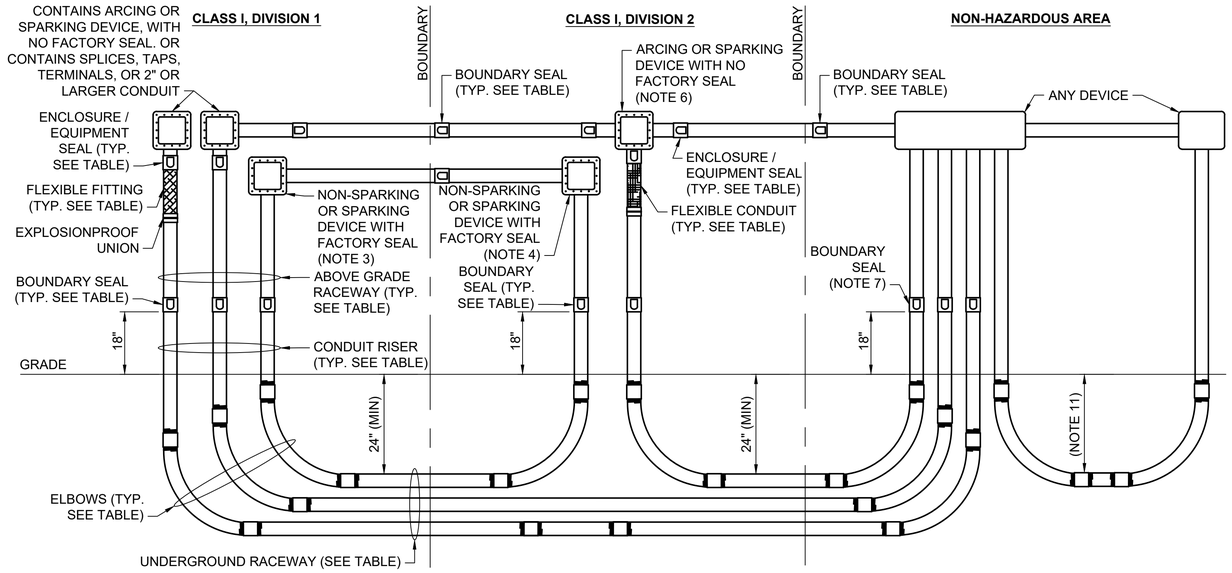

MATERIAL REQUIREMENTS (NOTE 1)				
RACEWAYS				
ABOVE GRADE RACEWAY		BELOW GRADE RACEWAY	FITTINGS	ENCLOSURES
RIGID	FLEXIBLE			
3/4" MIN. **HAZARDOUS OR NON-HAZARDOUS AREA WITHIN A NON-CONDITIONED SPACE:** - PVC COATED AND HOT-DIPPED GALVANIZED CONDUIT (DOUBLE COATING, "OCAL" OR SIMILAR) **HAZARDOUS, CONDITIONED SPACE:** - RIGID METAL CONDUIT (RMC) OR INTERMEDIATE METAL CONDUIT (IMC) **NON-HAZARDOUS, CONDITIONED SPACE:** - NOTE 2	3/4" MIN. **HAZARDOUS AREA, NON-CONDITIONED SPACE:** - CLASS I DIV 1 (C1D1): PVC COATED EXPLOSIONPROOF FLEXIBLE METAL FITTING (NOTE 10) - CLASS I DIV 2 (C1D2): PVC COATED LIQUID-TIGHT FLEXIBLE METAL CONDUIT WITH BONDING JUMPER (C1D2) (NOTE 8) **NON-HAZARDOUS, NON-CONDITIONED SPACE:** - PVC COATED LIQUID-TIGHT FLEXIBLE METAL CONDUIT **NON-HAZARDOUS, CONDITIONED SPACE:** - LIQUID-TIGHT FLEXIBLE METAL CONDUIT	1" MIN. **DIRECT-BURIED:** - PVC COATED AND HOT-DIPPED GALVANIZED CONDUIT (DOUBLE COATING, "OCAL" OR SIMILAR) **CONCRETE-ENCASED:** - PVC SCH. 40. **ELBOWS:** - PVC COATED AND HOT-DIPPED GALVANIZED CONDUIT (DOUBLE COATING, "OCAL" OR SIMILAR) **RISERS:** - PVC COATED AND HOT-DIPPED GALVANIZED CONDUIT (DOUBLE COATING, "OCAL" OR SIMILAR)	**ENCLOSURE / EQUIPMENT SEAL (NOTE 9):** - PVC COATED **BELOW GRADE TO ABOVE GRADE BOUNDARY SEAL (NOTE 7):** - PVC COATED. LOCATED WITHIN 18" OF GRADE. **ABOVE GRADE BOUNDARY SEAL (NOTE 7):** - PVC COATED. LOCATED WITHIN 10' OF BOUNDARY.	**CLASS I DIVISION 1 (C1D1):** - NON-CONDITIONED SPACE: * NEMA 4X 316/316L STAINLESS STEEL / NEMA 7 * NEMA 4X 316/316L STAINLESS STEEL (NOTE 4) - CONDITIONED SPACE: * NEMA 7 **CLASS I DIVISION 2 (C1D2):** - NON-CONDITIONED SPACE: * NEMA 4X 316/316L STAINLESS STEEL / NEMA 7 * NEMA 4X 316/316L STAINLESS STEEL (NOTE 4) - CONDITIONED SPACE: * NEMA 7 (NOTE 4) **NON-HAZARDOUS AREA:** - NON-CONDITIONED SPACE: * NEMA 4X 316/316L STAINLESS STEEL - CONDITIONED SPACE: * NEMA 1 / NEMA 12

NOTES:

1. MATERIAL REQUIREMENTS LISTED HERE MUST BE USED UNLESS OTHERWISE NOTED.
2. ELECTRICAL METALLIC TUBING (EMT) AND INTERMEDIATE METALLIC CONDUIT (IMC) ARE PERMITTED IN AREAS WHICH ARE CLASSIFIED AS NON-HAZARDOUS AND CONDITIONED SPACES. EMT MAY BE USED WHEN NOT SUBJECT TO PHYSICAL DAMAGE. IMC MUST BE USED WHERE SUBJECT TO PHYSICAL DAMAGE.
3. NEMA 7 NOT REQUIRED IF ENCLOSURE IS LISTED AS SUITABLE FOR CLASS I, DIVISION 1 LOCATIONS AND HOUSES INTRINSICALLY SAFE DEVICES OR DOES NOT CONTAIN ARCING OR SPARKING DEVICES.
4. NON-HAZARDOUS AREA ENCLOSURES MAY BE USED WHEN ENCLOSURE DOES NOT CONTAIN ARCING OR SPARKING DEVICES.
5. NO UNIONS, COUPLINGS, BOXES, OR OTHER FITTINGS EXCEPT FOR A LISTED EXPLOSION PROOF REDUCER AT THE SEAL IS PERMITTED BETWEEN SEAL AND BOUNDARY. IN CASES WHERE CONDUIT IS TRANSITIONING ABOVE GRADE FROM CLASS I, DIVISION 2 TO CLASS I, DIVISION 1 AREAS, LOCATE SEAL ON DIVISION 2 SIDE OF BOUNDARY WITHIN 10'.
6. PROVIDE SEAL WITHIN 18" OF ENCLOSURE, SIMILAR TO CLASS I, DIVISION 1 INSTALLATION. SEAL INSTALLED ON INSTRUMENTATION MUST BE INSTALLED BETWEEN FLEXIBLE CONDUIT AND INSTRUMENTATION.
7. BOUNDARY SEALS LOCATED BELOW GRADE TO ABOVE GRADE TRANSITIONS MAY BE LOCATED FURTHER THAN 18" ABOVE GRADE AS LONG AS THERE IS NO FITTING. NO UNIONS, COUPLINGS, BOXES OR OTHER FITTINGS EXCEPT FOR A LISTED EXPLOSION PROOF REDUCER AT THE SEAL IS PERMITTED BETWEEN THE SEAL AND GRADE. BOUNDARY SEALS LOCATED ABOVE GRADE THAT DO NOT TRANSITION FROM BELOW GRADE TO ABOVE GRADE MUST BE LOCATED WITHIN 10' OF THE BOUNDARY.
8. EXTERNAL BONDING JUMPER SECURED WITH CABLE TIES REQUIRED FOR LIQUID-TIGHT FLEXIBLE CONDUIT PER NFPA 70, ARTICLE 501.30.
9. PROVIDE SEAL WITHIN 18" OF ENCLOSURE CONTAINING SWITCHES, CIRCUIT BREAKERS, FUSES, RELAYS, RESISTORS, ARCING OR SPARKING DEVICES, OR HIGH TEMPERATURE APPARATUS, OR CONDUIT SIZE 2" OR LARGER.
10. PROVIDE FLEXIBLE CONDUIT/FITTING (DIV.1) AND CONDUIT UNION WHEN CONNECTING TO MOTORS, TANK MOUNTED EQUIPMENT, LIGHT POLES, AND OTHER LOCATIONS INDICATED ON DRAWINGS.
11. CONDUIT ROUTED UNDER SLABS IN NON-HAZARDOUS AREAS HAVE NO MINIMUM BURIAL DEPTH. WHEN NOT UNDER SLABS 24" MINIMUM BURIAL DEPTH APPLIES.
12. PROVIDE CONDUIT NAMEPLATES AT 20' INTERVALS FOR ALL ABOVE GRADE CONDUITS, INDOORS AND OUTDOORS, CONDUIT TRANSITIONS INTO UNDERGROUND STRUCTURES (VAULTS, PITS, MANHOLES, HANDHOLES, ETC.), AND AT ABOVE GRADE TO BELOW GRADE CONDUIT TRANSITION LOCATIONS. NAMEPLATES MUST MEET THE FOLLOWING REQUIREMENTS:
    - 304/316 GRADE STAINLESS STEEL
    - ROHS COMPLIANT
    - NON-FLAMMABLE
    - UV RESISTANT

DETAIL 1 / -

TYPICAL CONDUIT AND EQUIPMENT REQUIREMENTS FOR HAZARDOUS AND NON-HAZARDOUS AREAS

NOT TO SCALE

12/20/2023

REGISTERED PROFESSIONAL ENGINEER 10006PE OREGON JULY 12, 2022 TIMOTHY RENSHAW
EXPIRES: 12/31/2024

no.	date	by	ckd	description
A	12/21/23	TSR	BAW	ISSUED FOR PERMIT

ISSUED FOR PERMIT ONLY

BURNS McDONNELL
9400 WARD PARKWAY
KANSAS CITY, MO 64114
816-333-9400
Burns & McDonnell Engineering Co, Inc.

date	detailed
04/24/2023	S. JESBERG
designed	checked
T. RENSHAW	B. WINTER

PDX FUEL COMPANY L.L.C

PORTLAND INTERNATIONAL AIRPORT
5000 NE MARINE DR.
PORTLAND, OREGON 97218

PDX FACILITY IMPROVEMENTS
ELECTRICAL DETAILS - 10

project	contract
153929	
drawing	rev.
E-510	A

file 153929E-510.dwg

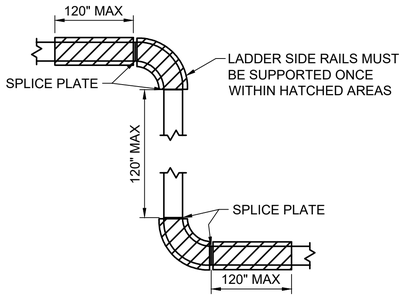

VERTICAL 90 DEGREE BEND - 12" RADIUS FITTING MAX

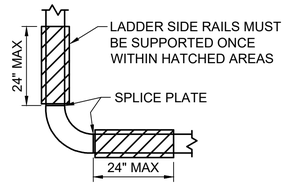

HORIZONTAL 90 DEGREE BEND - 12" RADIUS FITTING

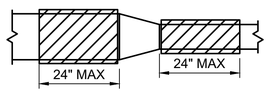

STRAIGHT REDUCER FITTING

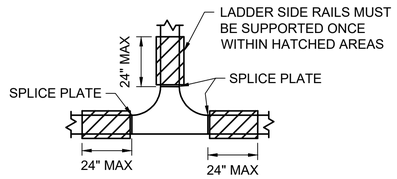

HORIZONTAL TEE FITTING 24" RADIUS MAX

NOTES:

1. BASIS OF DESIGN IS BASED ON RECOMMENDED B-LINE SUPPORT LOCATIONS.
2. PROVIDE SUPPORT FOR EVERY CABLE TRAY VERTICAL/HORIZONTAL TRANSITION AND BEND PER NEMA VE-2 OR RECOMMENDED MANUFACTURER SUPPORT LOCATIONS. PROVIDE SUPPORT ON STRAIGHT RUNS AT MAXIMUM 20' INTERVALS. SEE STRUCTURAL DRAWINGS FOR TYPICAL CABLE TRAY SUPPORT.

DETAIL 1 / -

CABLE TRAY FITTING SUPPORT LOCATIONS

NOT TO SCALE

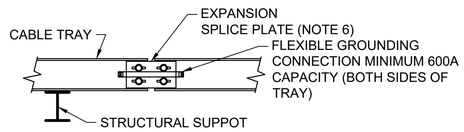

EXPANSION SPLICE PLATE

NOTES:

1. BOLTS SHALL BE INSERTED FROM INSIDE THE TRAY.
2. ALL CONNECTIONS SHALL BE MADE WRENCH TIGHT.
3. PAINT OR OTHER NON-CONDUCTIVE COATING SHALL BE REMOVED AT THE POINT OF CONTACT, OR A FASTENER THAT WILL PENETRATE THE COATING SHALL BE USED.
4. ALL CONNECTIONS SHALL BE COATED WITH ANTI-OXIDANT COMPOUND.
5. USE MATERIALS NOT SUBJECT TO CORROSION FROM THE ENVIRONMENT OR APPLICATION.
6. EXPANSION SPLICE PLATE TO OCCUR EVERY 52' ON STRAIGHT RUNS. SET GAP PER NEMA VE 2, FIGURE 4.13B.

DETAIL 2 / -

CABLE TRAY SPLICE PLATE

NOT TO SCALE

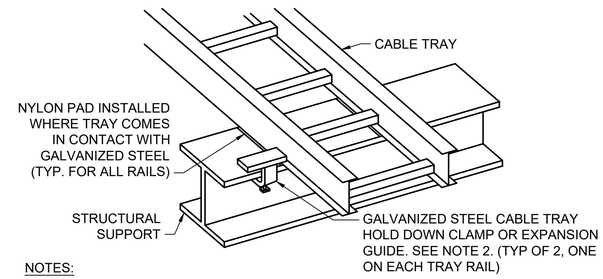

NOTES:

1. REFER TO STRUCTURAL DRAWINGS FOR SUPPORT AND FOUNDATION DETAILS AND ELEVATIONS.
2. INSTALL CABLE TRAY HOLD DOWN CLAMP AND EXPANSION GUIDES PER NEMA VE-2.

DETAIL 3 / -

CABLE TRAY HOLD DOWN CLAMP

NOT TO SCALE

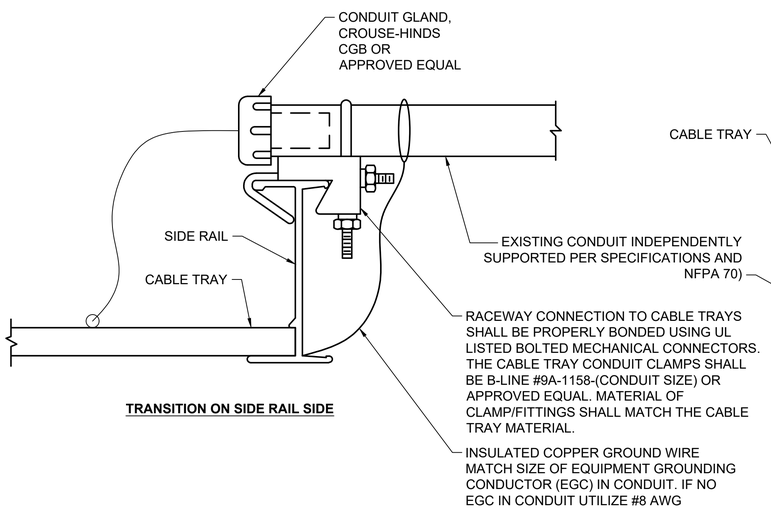

TRANSITION ON SIDE RAIL SIDE

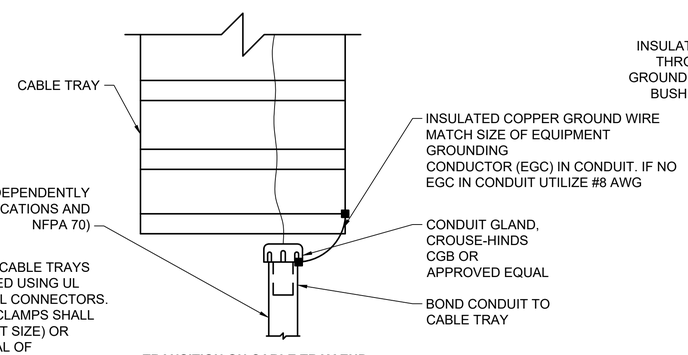

TRANSITION ON CABLE TRAY END

DETAIL 4 / -

CONDUIT TO CABLE TRAY TRANSITION

NOT TO SCALE

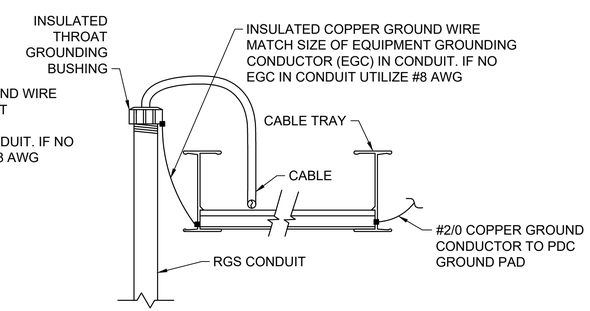

CABLE TO CONDUIT TRANSITION (INSIDE PDC)

no.	date	by	ckd	description
A	12/21/23	TSR	BAW	ISSUED FOR PERMIT

ISSUED FOR PERMIT ONLY

BURNS McDONNELL
9400 WARD PARKWAY
KANSAS CITY, MO 64114
816-333-9400
Burns & McDonnell Engineering Co, Inc.

date	detailed
04/24/2023	S. JESBERG
designed	checked
T. RENSHAW	B. WINTER

PDX FUEL COMPANY L.L.C

PORTLAND INTERNATIONAL AIRPORT
5000 NE MARINE DR.
PORTLAND, OREGON 97218

PDX FACILITY IMPROVEMENTS
ELECTRICAL DETAILS - 11

project	contract
153929	

drawing **E-511** rev. **A**

file 153929E-511.dwg

12/20/2023

REGISTERED PROFESSIONAL ENGINEER 100084PE OREGON JULY 12, 2022 TIMOTHY RENSHAW
EXPIRES: 12/31/2024

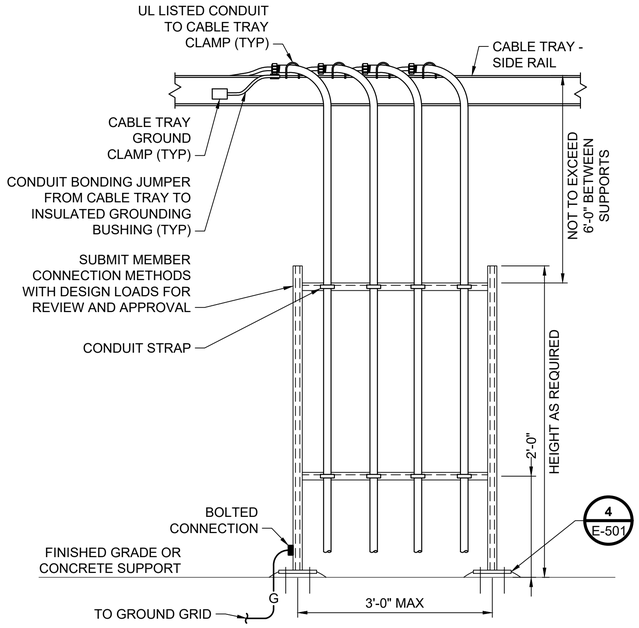

NOTES:

1. PROVIDE ADDITIONAL VERTICAL AND HORIZONTAL STRUTS AS NEEDED TO SUPPORT THE QUANTITY OF CONDUITS AND CABLES TO CABLE TRAY.
2. WHERE CONCRETE FOUNDATIONS ARE UNAVAILABLE, ANCHOR/SUPPORT FROM CONCRETE PIERS SIMILAR TO DETAIL 4 ON SHEET E-501.
3. DETAIL SPECIFICALLY SHOWS CONDUIT QUANTITIES FOR PUMP TRAIN CIRCUITS. FOR OTHER USES, RUN CONDUIT QUANTITIES AS NEEDED.

DETAIL 1 -
CABLE TRAY TO STRUCTURAL RACK DETAIL
NOT TO SCALE

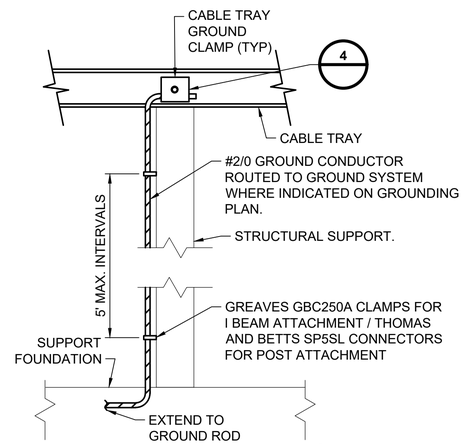

DETAIL 2 -
CABLE TRAY GROUNDING DETAIL
NOT TO SCALE

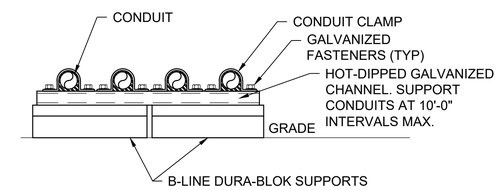

NOTE:

1. PROVIDE CONDUIT SUPPORT INSIDE TANK CONTAINMENT AREA AS REQUIRED. SUPPORT CONDUIT AT A MAXIMUM OF 10' INTERVALS BETWEEN SUPPORT LOCATIONS. PROVIDE SUPPORTS IN MANNER ALLOWING CONDUIT TO BE INSTALLED FLAT.

DETAIL 3 -
TANK AREA CONDUIT SUPPORT
NOT TO SCALE

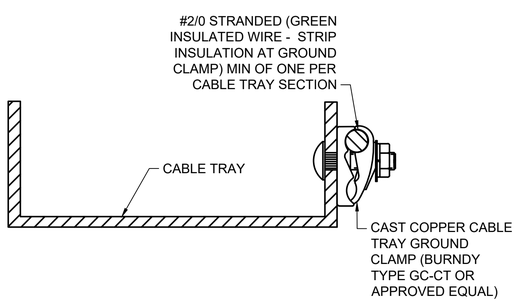

DETAIL 4 -
CABLE TRAY GROUNDING CLAMP
NOT TO SCALE

no.	date	by	ckd	description
A	12/21/23	TSR	BAW	ISSUED FOR PERMIT

ISSUED FOR PERMIT ONLY

BURNS McDONNELL
9400 WARD PARKWAY
KANSAS CITY, MO 64114
816-333-9400
Burns & McDonnell Engineering Co, Inc.

date	detailed
04/24/2023	S. JESBERG
designed	checked
T. RENSHAW	B. WINTER

PDX FUEL COMPANY L.L.C

PORTLAND INTERNATIONAL AIRPORT
5000 NE MARINE DR.
PORTLAND, OREGON 97218

PDX FACILITY IMPROVEMENTS
ELECTRICAL DETAILS - 12

12/20/2023

REGISTERED PROFESSIONAL ENGINEER 100084PE OREGON JULY 12, 2022 TIMOTHY RENSHAW
EXPIRES: 12/31/2024

project	contract
153929	

drawing **E-512** rev. **A**

file 153929E-512.dwg

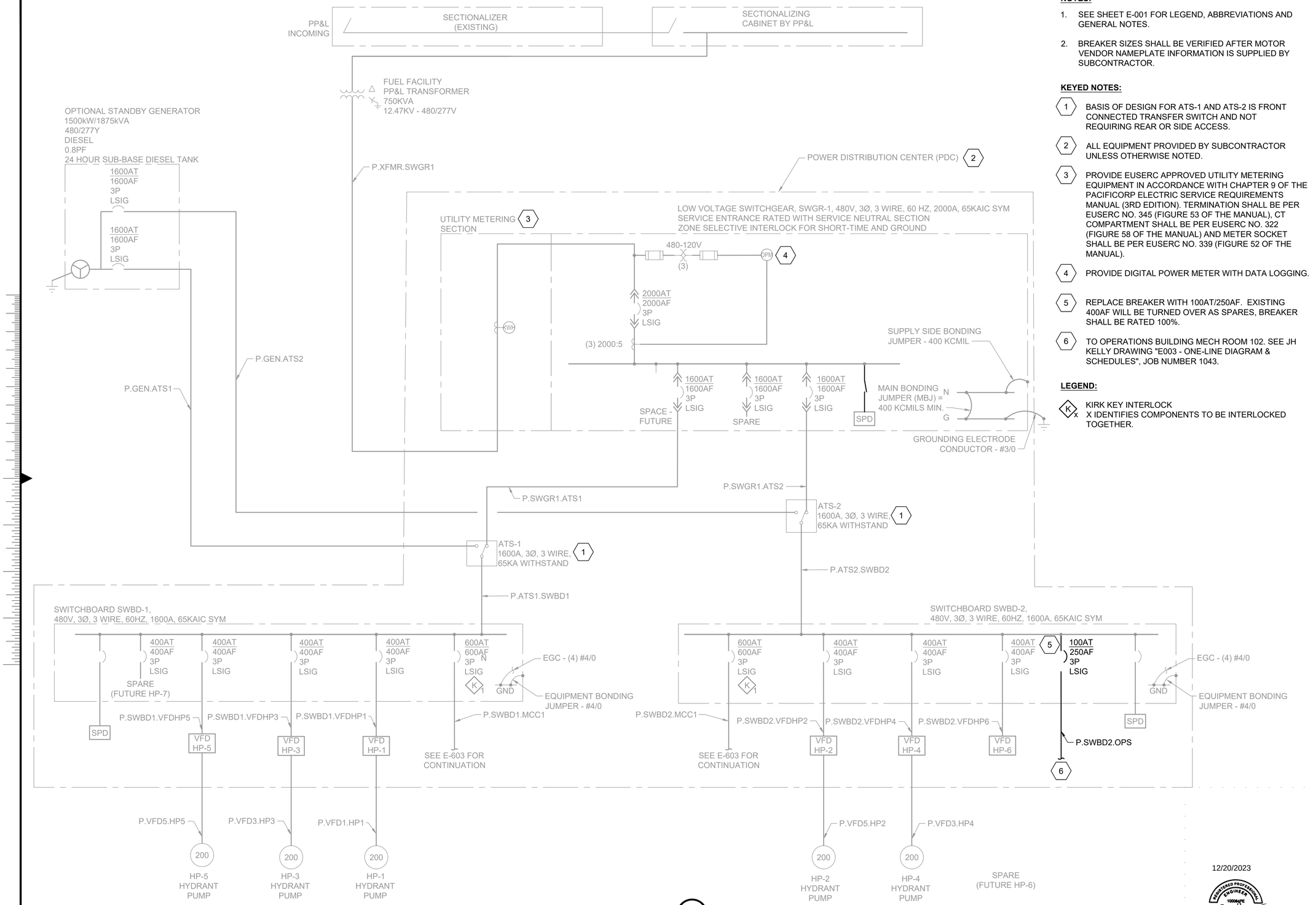

DIAGRAM 1

ONE-LINE DIAGRAM

NOT TO SCALE

NOTES:

1. SEE SHEET E-001 FOR LEGEND, ABBREVIATIONS AND GENERAL NOTES.
2. BREAKER SIZES SHALL BE VERIFIED AFTER MOTOR VENDOR NAMEPLATE INFORMATION IS SUPPLIED BY SUBCONTRACTOR.

KEYED NOTES:

1. BASIS OF DESIGN FOR ATS-1 AND ATS-2 IS FRONT CONNECTED TRANSFER SWITCH AND NOT REQUIRING REAR OR SIDE ACCESS.
2. ALL EQUIPMENT PROVIDED BY SUBCONTRACTOR UNLESS OTHERWISE NOTED.
3. PROVIDE EUSERC APPROVED UTILITY METERING EQUIPMENT IN ACCORDANCE WITH CHAPTER 9 OF THE PACIFICORP ELECTRIC SERVICE REQUIREMENTS MANUAL (3RD EDITION). TERMINATION SHALL BE PER EUSERC NO. 345 (FIGURE 53 OF THE MANUAL), CT COMPARTMENT SHALL BE PER EUSERC NO. 322 (FIGURE 58 OF THE MANUAL) AND METER SOCKET SHALL BE PER EUSERC NO. 339 (FIGURE 52 OF THE MANUAL).
4. PROVIDE DIGITAL POWER METER WITH DATA LOGGING.
5. REPLACE BREAKER WITH 100AT/250AF. EXISTING 400AF WILL BE TURNED OVER AS SPARES, BREAKER SHALL BE RATED 100%.
6. TO OPERATIONS BUILDING MECH ROOM 102. SEE JH KELLY DRAWING "E003 - ONE-LINE DIAGRAM & SCHEDULES", JOB NUMBER 1043.

LEGEND:

K x — KIRK KEY INTERLOCK
X IDENTIFIES COMPONENTS TO BE INTERLOCKED TOGETHER.

no.	date	by	ckd	description
A	12/21/23	TSR	BAW	ISSUED FOR PERMIT

ISSUED FOR PERMIT ONLY

BURNS McDONNELL
9400 WARD PARKWAY
KANSAS CITY, MO 64114
816-333-9400
Burns & McDonnell Engineering Co, Inc.

date	detailed
04/24/2023	S. JESBERG
designed	checked
T. RENSHAW	B. WINTER

PDX FUEL COMPANY L.L.C

PORTLAND INTERNATIONAL AIRPORT
5000 NE MARINE DR.
PORTLAND, OREGON 97218

PDX FACILITY IMPROVEMENTS
ONE-LINE DIAGRAM - 1

project	contract
153929	

drawing **E-602** rev. **A**

file 153929E-602.dwg

12/20/2023

REGISTERED PROFESSIONAL ENGINEER 100084PE OREGON JULY 12, 2022 TIMOTHY RENSHAW
EXPIRES: 12/31/2024

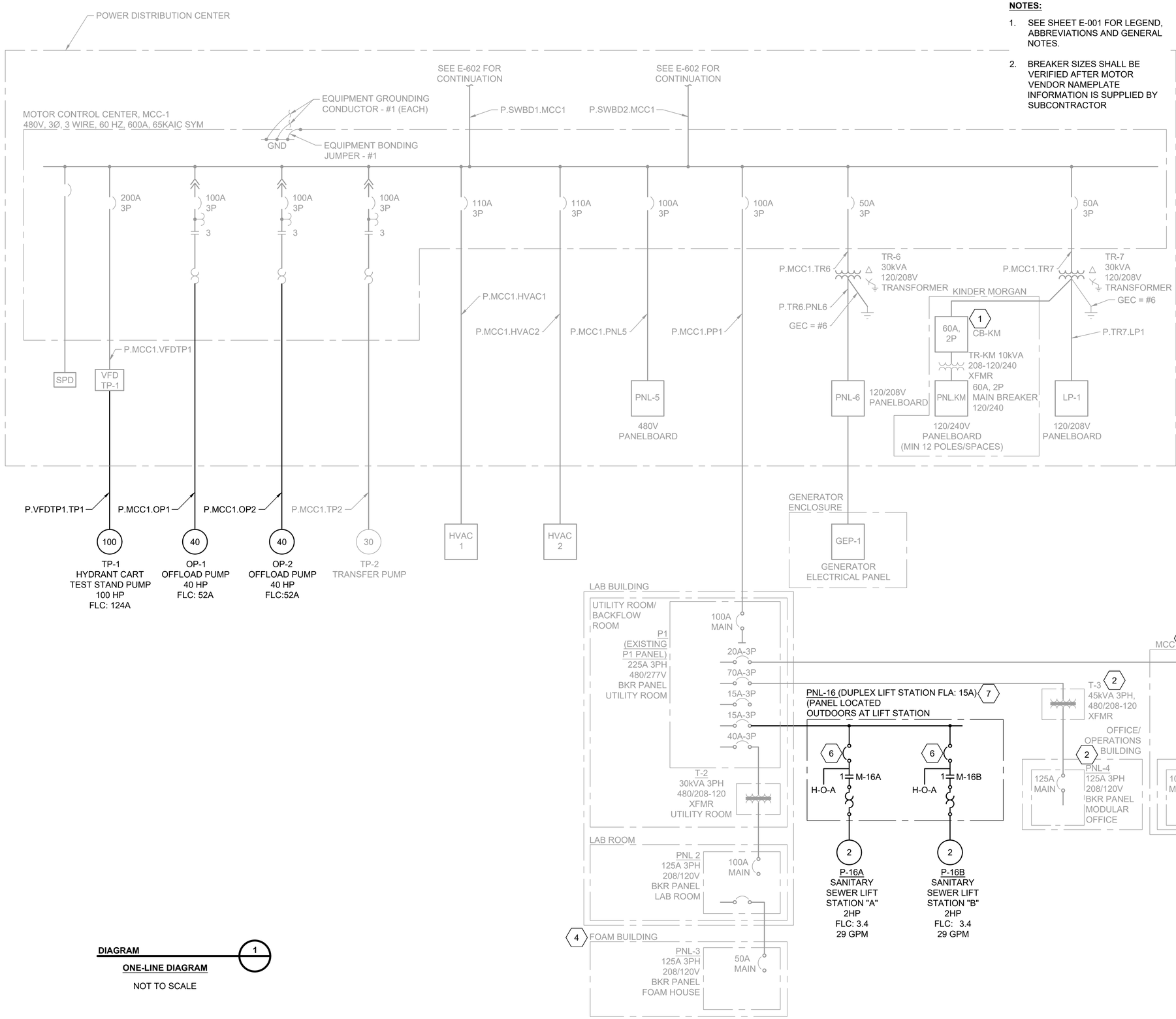

NOTES:

1. SEE SHEET E-001 FOR LEGEND, ABBREVIATIONS AND GENERAL NOTES.
2. BREAKER SIZES SHALL BE VERIFIED AFTER MOTOR VENDOR NAMEPLATE INFORMATION IS SUPPLIED BY SUBCONTRACTOR

KEYED NOTE:

1. BREAKER WITHIN ENCLOSURE, LOCATED FOLLOWING TAP RULE. ENCLOSURE TO BE LOCKABLE AND KM TO BE PROVIDED KEY.
2. DEMOLISH AND REMOVE ONCE NEW OPERATIONS BUILDING IS COMMISSIONED.
3. MCC BUILDING TO BE DEMOLISHED ONCE THE FOLLOWING HAS OCCURRED: (MOV POWER TO MOVS ON EXISTING TANKS WERE CUT OVER TO PANELBOARD WITHIN PDC IN PHASE 1)
   - EXISTING PLC IN MCC BUILDING IS DECOMMISSIONED
   - NEW OPERATIONS BUILDING IS OPERATIONAL AND EXISTING OPERATIONS BUILDING NO LONGER REQUIRES POWER (EQUIPMENT LOCATED IN MCC BUILDING THAT FEEDS EXISTING OPS. BUILDING).
   - NEW AREA LIGHTS ARE OPERATIONAL.
4. DEMOLISH AND REMOVE ELECTRICAL EQUIPMENT WITHIN FOAM BUILDING ONCE NEW FIRE PROTECTION IS COMMISSIONED AT SITE.
5. NEW LIFT STATION TO REPLACE EXISTING LIFT STATION. LIFT STATION WILL BE FED FROM 480V, 3 PHASE CIRCUIT.
6. BREAKER SIZED BY PANEL FABRICATOR.
7. DUPLEX LIFT STATION PROVIDED BY OTHERS.

DIAGRAM 1

ONE-LINE DIAGRAM

NOT TO SCALE

12/20/2023

REGISTERED PROFESSIONAL ENGINEER 100084PE OREGON JULY 12, 2001 TIMOTHY RENSHAW

EXPIRES: 12/31/2024

no.	date	by	ckd	description
A	12/21/23	TSR	BAW	ISSUED FOR PERMIT

ISSUED FOR PERMIT ONLY

BURNS McDONNELL
9400 WARD PARKWAY
KANSAS CITY, MO 64114
816-333-9400
Burns & McDonnell Engineering Co, Inc.

date	detailed
04/24/2023	S. JESBERG
designed	checked
T. RENSHAW	B. WINTER

PDX FUEL COMPANY L.L.C

PORTLAND INTERNATIONAL AIRPORT
5000 NE MARINE DR.
PORTLAND, OREGON 97218

PDX FACILITY IMPROVEMENTS
ONE-LINE DIAGRAM - 2

project	contract
153929	

drawing **E-603** rev. **A**

file 153929E-603.dwg

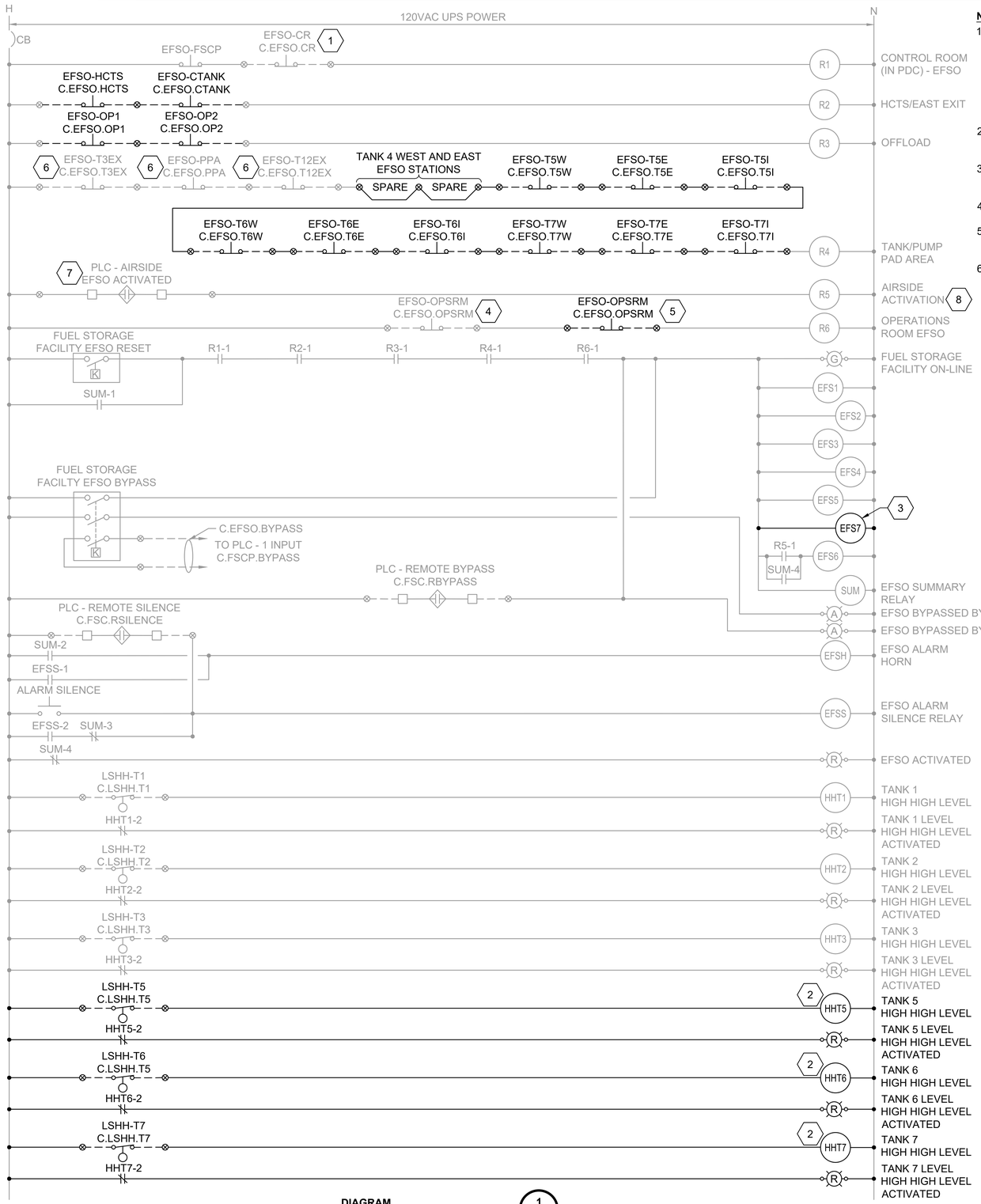

DIAGRAM 1 -

WIRING DIAGRAM - FUEL FACILITY TANK LEVEL/EFSO SYSTEM

NOT TO SCALE

NOTES:

1. PANEL WAS FURNISHED IN PDX FACILITY UPGRADE PROJECT (2023) PROJECT. REFER TO AS-BUILT CONSTRUCTION DOCUMENTS FOR FURTHER INFORMATION SUCH AS DETAILED WIRING. FABRICATION OF PANEL WAS PERFORMED BY ATGI, ATGI PROJECT NUMBER 34-39, WORK ORDER 22654.8010, DRAWING INDEX PDX-G-003).
2. SEE SHEET E-001 FOR GENERAL NOTES, LEGEND AND ABBREVIATIONS.
3. REFER TO DETAIL 1 AND 2 ON DRAWING E-501 FOR EFSO STATION CONSTRUCTION.
4. REFER TO DRAWING E-506 FOR PANEL ELEVATION.
5. CERTAIN DEVICES ARE LOCATED IN THE FIELD. REFER TO PLAN DRAWINGS FOR LOCATIONS.
6. REFER TO E-605 FOR TANK AND EFSO CONTACTS INFORMATION.

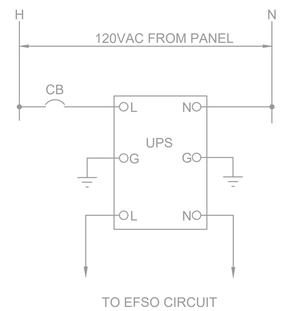

KEYED NOTES:

1. PUSHBUTTONS LOCATED IN PDC-01, AT FUEL STORAGE FACILITY.
2. GENERAL PURPOSE RELAY, 4 POLE WITH 10A RATED CONTACTS, 120V COIL, MANUAL OPERATOR AND PILOT LIGHT.
3. EFSO RELAY, HEAVY DUTY INDUSTRIAL 6 POLE CONTROL RELAY, 10 AMP CONVERTIBLE CONTACTS, 120V COIL.
4. DEMOLISH PUSHBUTTON. PUSHBUTTON LOCATED IN EXISTING OPERATIONS ROOM AT FUEL STORAGE FACILITY. PRIOR TO DEMOLITION OF EXISTING OPERATIONS BUILDING, JUMPER ACROSS AND REMOVE THIS PUSHBUTTON SO IT IS REMOVED FROM RELAY, R6, LOGIC.
5. PUSHBUTTON LOCATED IN OPERATIONS ROOM AT FUEL STORAGE FACILITY.
6. DEMOLISH PUSHBUTTON PRIOR TO DEMOLITION OF TANKS 1, 2 AND 3, JUMPER ACROSS AND REMOVE PUSHBUTTONS SO THEY ARE REMOVED FROM RELAY, R4, LOGIC. INLET AND OUTLET MOV LABELING WILL BE AS FOLLOWS:
   CIRCUIT #: C.EFSO.MOV4A (FUTURE), C.EFSO.MOV4B (FUTURE) DESCRIPTION: TANK 4 INLET ESD TERMINAL (FUTURE), TANK 4 OUTLET ESD TERMINAL (FUTURE)
7. AIRSIDE EFSO ACTIVATION SIGNAL COMES FROM FUEL STORAGE FACILITY PLC. RE-PURPOSED FOR MOV ESD TERMINALS ON THE INLET AND OUTLET VALVE. LABELING WILL BE AS FOLLOWS:
   CIRCUIT #: C.EFSO.MOV6A, C.EFSO.MOV6B DESCRIPTION: TANK 6 INLET ESD TERMINAL, TANK 6 OUTLET ESD TERMINAL.
8. RELABEL TO "AIRSIDE EFSO STATUS"

LEGEND:

⊗ TERMINAL IN BULK FUEL FACILITY EFSO PANEL

no.	date	by	ckd	description
A	12/21/23	TSR	BAW	ISSUED FOR PERMIT

ISSUED FOR PERMIT ONLY

BURNS McDONNELL
9400 WARD PARKWAY
KANSAS CITY, MO 64114
816-333-9400
Burns & McDonnell Engineering Co, Inc.

date	detailed
04/24/2023	S. JESBERG
designed	checked
T. RENSHAW	B. WINTER

PDX FUEL COMPANY L.L.C

PORTLAND INTERNATIONAL AIRPORT
5000 NE MARINE DR.
PORTLAND, OREGON 97218

PDX FACILITY IMPROVEMENTS
FUEL FACILITY TANK LEVEL AND EFSO DIAGRAM

project	contract
153929	

drawing **E-604** rev. **A**

12/20/2023

REGISTERED PROFESSIONAL ENGINEER 100064PE OREGON JULY 12, 2022 TIMOTHY RENSHAW

EXPIRES: 12/31/2024

file 153929E-604.dwg

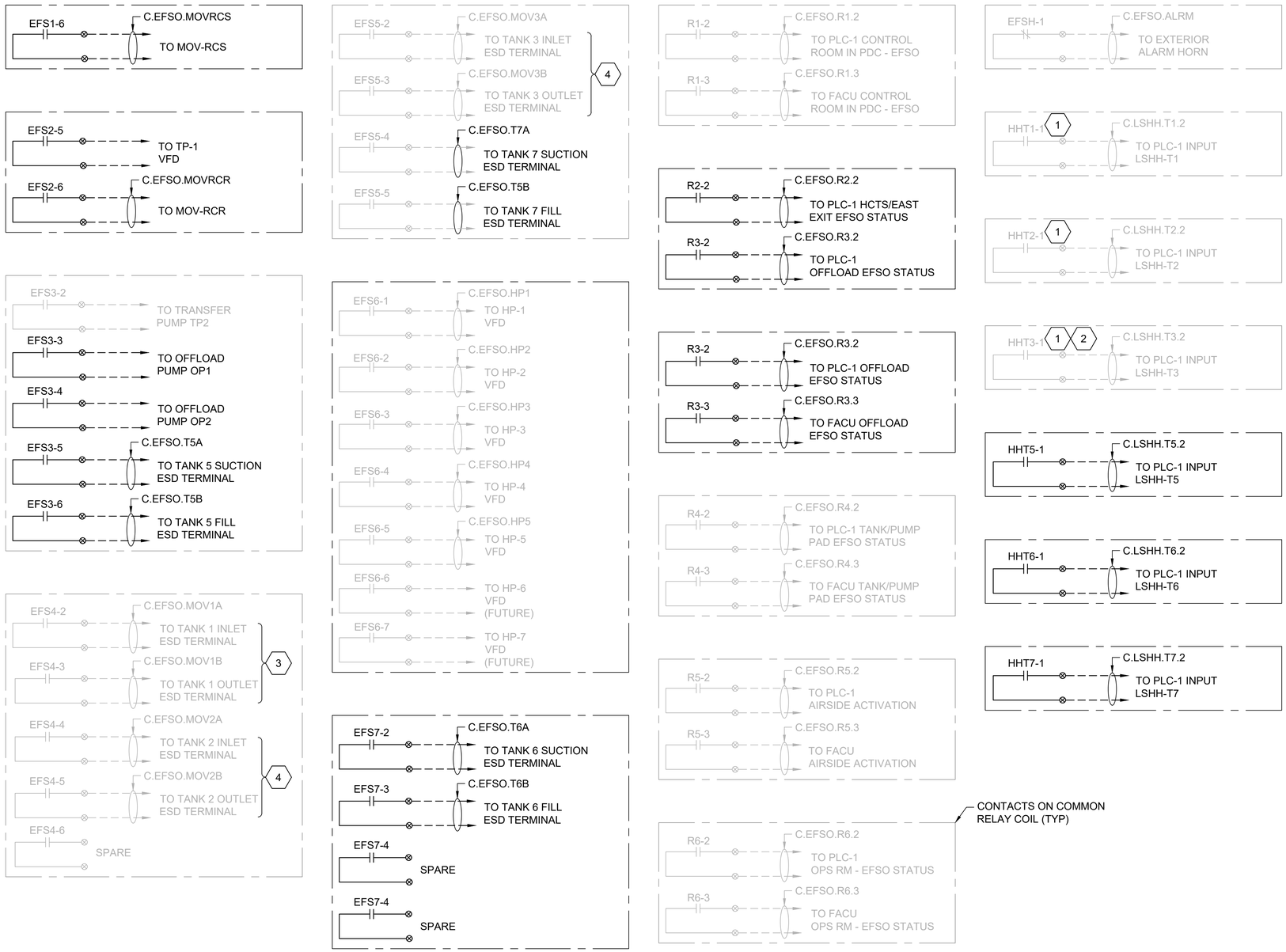

DIAGRAM 1 / -

WIRING DIAGRAM - FUEL FACILITY TANK LEVEL/EFSO CONTACTS

NOT TO SCALE

NOTES:

1. SEE SHEET E-001 FOR GENERAL NOTES, LEGEND AND ABBREVIATIONS.
2. REFER TO DETAIL 1 AND 2 ON DRAWING E-501 FOR EFSO STATION CONSTRUCTION.
3. REFER TO DRAWING E-506 FOR PANEL ELEVATION.
4. CERTAIN DEVICES ARE LOCATED IN THE FIELD. REFER TO PLAN DRAWINGS FOR LOCATIONS.

KEYED NOTES:

1. ONCE TANKS 1, 2 AND 3 ARE DEMOLISHED AND REMOVED DEMOLISH AND REMOVE ALL FIELD WIRING TO STORAGE TANKS. IDENTIFY CONTACTS AS SPARE. KEEP WIRING BETWEEN PANEL AND PLC CABINET. IDENTIFY CABLES AS SPARE.
2. LABEL CONTACT AS "HHT4-1 - FUTURE".
3. ONCE TANK 1 IS DEMOLISHED, CONTACTS ARE TO BE RESERVED FOR FUTURE TANK 4, ESD TERMINALS ON THE INLET AND OUTLET MOVS. LABELING WILL BE AS FOLLOWS:
   CIRCUIT #: C.EFSO.MOV4A (FUTURE), C.EFSO.MOV4B (FUTURE)
   DESCRIPTION: TANK 4 INLET ESD TERMINAL (FUTURE), TANK 4 OUTLET ESD TERMINAL (FUTURE)
4. ONCE TANK IS DEMOLISHED, CONTACTS ARE TO BE MADE SPARE. REMOVE WIRING ON CONTACTS. LABELING WILL BE AS FOLLOWS:
   CIRCUIT #: N/A
   DESCRIPTION: SPARE

LEGEND:

⊗ TERMINAL IN BULK FUEL FACILITY EFSO PANEL

no.	date	by	ckd	description
A	12/21/23	TSR	BAW	ISSUED FOR PERMIT

ISSUED FOR PERMIT ONLY

BURNS McDONNELL
9400 WARD PARKWAY
KANSAS CITY, MO 64114
816-333-9400
Burns & McDonnell Engineering Co, Inc.

date	detailed
04/24/2023	S. JESBERG
designed	checked
T. RENSHAW	B. WINTER

PDX FUEL COMPANY L.L.C

PORTLAND INTERNATIONAL AIRPORT
5000 NE MARINE DR.
PORTLAND, OREGON 97218

PDX FACILITY IMPROVEMENTS

FUEL FACILITY TANK LEVEL AND EFSO CONTACTS

project	contract
153929	

drawing **E-605** rev. **A**

file 153929E-605.dwg

12/20/2023

REGISTERED PROFESSIONAL ENGINEER 100084PE OREGON JULY 12, 2021 TIMOTHY RENSHAW

EXPIRES: 12/31/2024

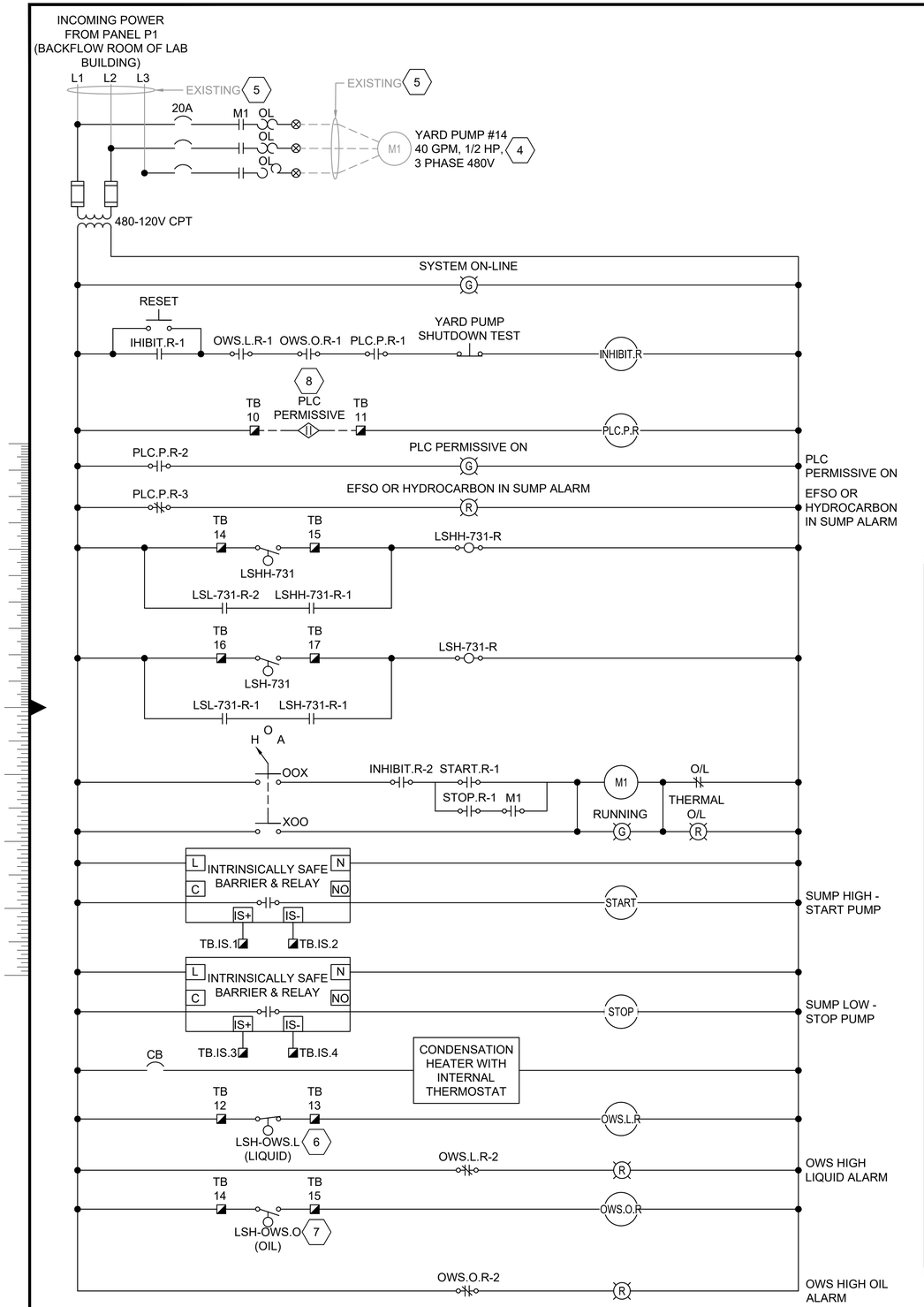

DETAIL 1

CONTROL DIAGRAM - CONTAINMENT SUMP PANEL

NOT TO SCALE

NOTES:

1. THE HPP CONTAINMENT SUMP PANEL IS FURNISHED UNDER 33 56 45 – ABOVEGROUND OIL WATER SEPARATOR.

KEYED NOTES:

1. HPP CONTAINMENT SUMP PANEL SHALL BE NEMA 4X, STAINLESS STEEL.
2. THE CONTAINMENT SUMP PANEL IS RESPONSIBLE FOR STARTING AND STOPPING YARD PUMP #14 AUTOMATICALLY BASED ON SUMP PIT LEVEL FLOATS. THE SUMP PANEL IS ALSO RESPONSIBLE FOR INHIBITING / PREVENTING THE YARD PUMP FROM RUNNING IF THE OWS ENCOUNTERS A HIGH LIQUID OR HIGH OIL ALARM. THE HIGH OIL AND HIGH LIQUID ALARMS ARE PASSED ONTO THE PLC AS INPUTS. THE SUMP PANEL IS ALSO RESPONSIBLE FOR INHIBITING / PREVENTING THE YARD PUMP FROM RUNNING IF THE PLC PERMISSIVE IS REMOVED. THE PLC PERMISSIVE WILL BE REMOVED IF AN EFSO HAS OCCURRED OR IF HYDROCARBONS HAVE BEEN DETECTED IN THE SUMP. THE SUMP FLOATS SHALL BE INTRINSICALLY SAFE AND SUITABLE FOR USE IN A CLASS 1 DIVISION 1 GROUP D HAZARDOUS LOCATION. THE SUMP PANEL SHALL BE UL LISTED TO 508A AND UL 698A.
3. SUBMIT PANEL DRAWINGS FOR APPROVAL. THE SUMP PANEL SHALL BE UL LISTED TO UL 508A AND UL698A (I.S. CIRCUITS).
4. HORSEPOWER BASED ON 1994 RECORD DRAWING, M2 "BULK FUEL STORAGE EXPANSION 94-1014"
5. INVESTIGATE EXISTING MOTOR NAMEPLATE HORSEPOWER, FULL LOAD CURRENT, TRIP SETTING ON MOTOR CIRCUIT PROTECTOR, HEATER MODEL NUMBER AND CONDUCTOR SIZES. DISCUSS RESULTS WITH ENGINEER.
6. FLOAT CONTACTS OPEN ON RISING LEVEL / ABOVE SET POINT.
7. FLOAT CONTACTS OPEN ON FALLING LEVEL / BELOW SET POINT.
8. PLC PERMISSIVE CONTACTS ARE NORMALLY OPEN CONTACTS. CONTACTS OPEN WHEN AN EFSO HAS OCCURRED OR HYDROCARBONS ARE DETECTED WITHIN SUMP.

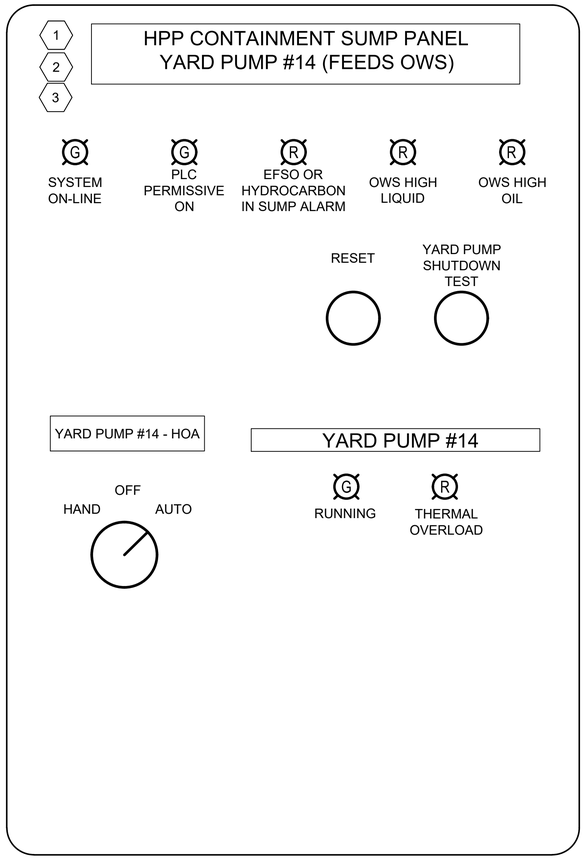

DETAIL 2

CONTAINMENT SUMP PANEL LAYOUT

NOT TO SCALE

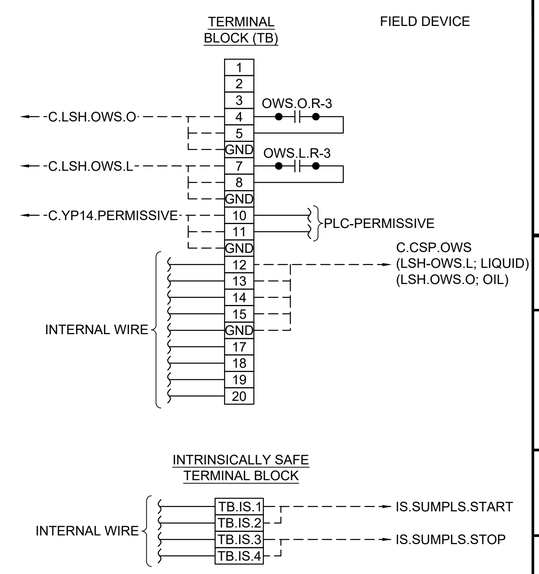

12/20/2023

REGISTERED PROFESSIONAL ENGINEER
1000 WATTS
OREGON
MAY 12, 2006
TIMOTHY RENSHAW
EXPIRES: 12/31/2024

no.	date	by	ckd	description
A	12/21/23	TSR	BAW	ISSUED FOR PERMIT

ISSUED FOR PERMIT ONLY

BURNS McDONNELL
9400 WARD PARKWAY
KANSAS CITY, MO 64114
816-333-9400
Burns & McDonnell Engineering Co, Inc.

date	detailed
04/24/2023	S. JESBERG
designed	checked
T. RENSHAW	B. WINTER

PDX FUEL COMPANY L.L.C

PORTLAND INTERNATIONAL AIRPORT
5000 NE MARINE DR.
PORTLAND, OREGON 97218

PDX FACILITY IMPROVEMENTS
OWS LIFT STATION

project	contract
153929	

drawing **E-606** rev. **A**

file 153929E-606.dwg

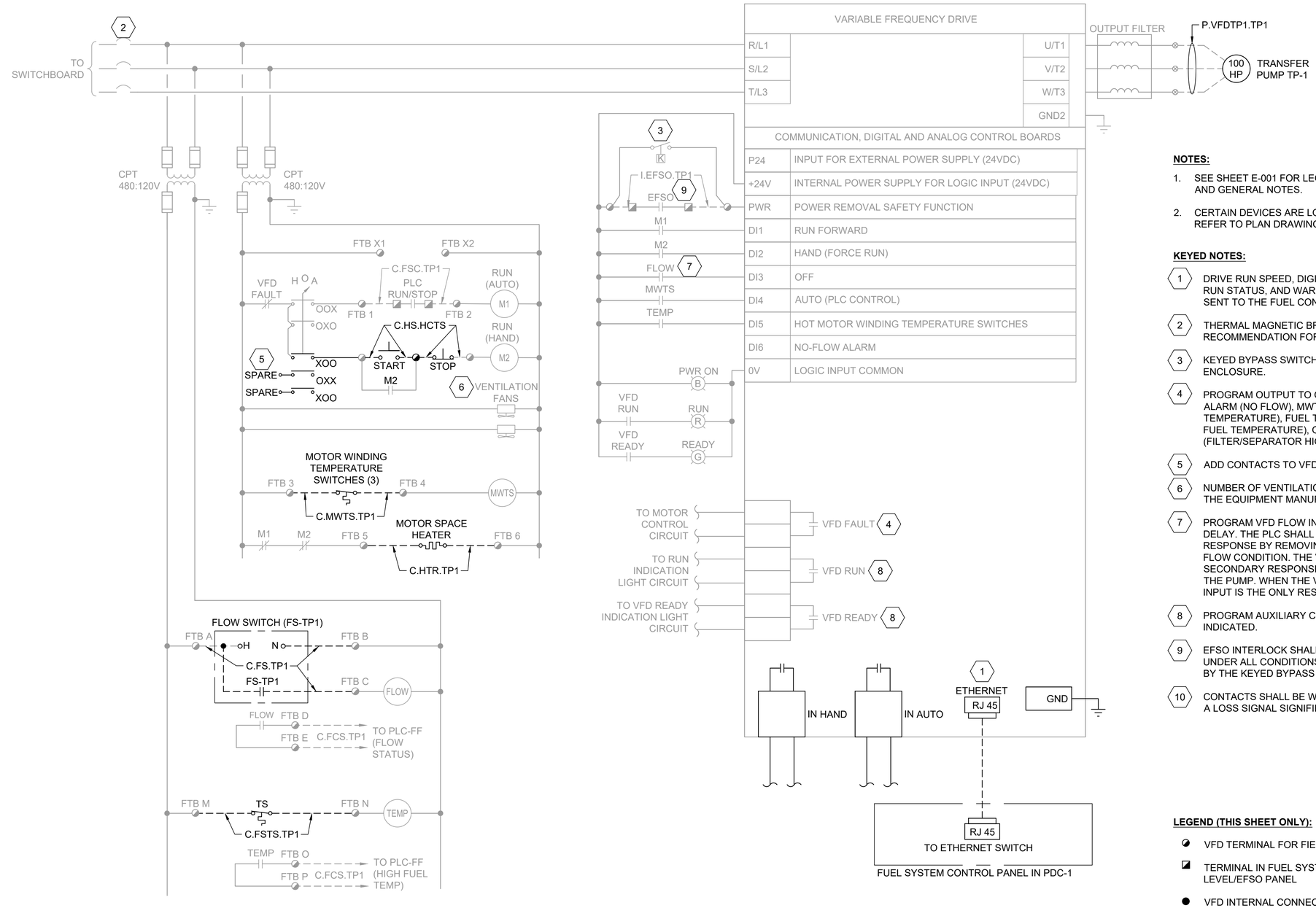

NOTES:

1. SEE SHEET E-001 FOR LEGEND, ABBREVIATIONS AND GENERAL NOTES.
2. CERTAIN DEVICES ARE LOCATED IN THE FIELD. REFER TO PLAN DRAWINGS FOR LOCATIONS.

KEYED NOTES:

1. DRIVE RUN SPEED, DIGITAL INPUT STATUS, FAULT STATUS, RUN STATUS, AND WARNINGS SHALL BE PROGRAMMED AND SENT TO THE FUEL CONTROL SYSTEM PLC VIA ETHERNET.
2. THERMAL MAGNETIC BREAKER SIZED PER MANUFACTURER RECOMMENDATION FOR DRIVE.
3. KEYED BYPASS SWITCH MOUNTED TO FACE OF VFD ENCLOSURE.
4. PROGRAM OUTPUT TO OPEN DURING VFD FAULT, FLOW ALARM (NO FLOW), MWTS ALARM (HIGH MOTOR TEMPERATURE), FUEL TEMPERATURE SWITCH ALARM (HIGH FUEL TEMPERATURE), OR MOISTURE ALARM (FILTER/SEPARATOR HIGH WATER).
5. ADD CONTACTS TO VFD CABINET AS SHOWN.
6. NUMBER OF VENTILATION FANS SHALL BE AS REQUIRED BY THE EQUIPMENT MANUFACTURER.
7. PROGRAM VFD FLOW INPUT WITH AN ADJUSTABLE TIME DELAY. THE PLC SHALL PROVIDE PRIMARY SHUTDOWN RESPONSE BY REMOVING THE RUN SIGNAL DURING A NO FLOW CONDITION. THE VFD FAULT INPUT SHALL PROVIDE A SECONDARY RESPONSE IF THE PLC FAILS TO SHUT DOWN THE PUMP. WHEN THE VFD IS IN HAND MODE, THE VFD FAULT INPUT IS THE ONLY RESPONSE TO A NO FLOW CONDITION.
8. PROGRAM AUXILIARY CONTACTS TO PERFORM FUNCTION INDICATED.
9. EFSO INTERLOCK SHALL INHIBIT OPERATION OF THE VFD UNDER ALL CONDITIONS AND SHALL ONLY BE OVERRIDDEN BY THE KEYED BYPASS SWITCH.
10. CONTACTS SHALL BE WIRED AND PROGRAMMED SUCH THAT A LOSS SIGNAL SIGNIFIES AN ALARM CONDITION.

LEGEND (THIS SHEET ONLY):

- VFD TERMINAL FOR FIELD WIRING
- TERMINAL IN FUEL SYSTEM CONTROL PANEL OR TANK LEVEL/EFSO PANEL
- VFD INTERNAL CONNECTION

DIAGRAM 1

HYDRANT CART TEST STAND SCHEMATIC

NOT TO SCALE

12/20/2023

REGISTERED PROFESSIONAL ENGINEER 100084PE OREGON JULY 12, 2022 TIMOTHY RENSHAW

EXPIRES: 12/31/2024

no.	date	by	ckd	description
A	12/21/23	TSR	BAW	ISSUED FOR PERMIT

ISSUED FOR PERMIT ONLY

BURNS McDONNELL
9400 WARD PARKWAY
KANSAS CITY, MO 64114
816-333-9400
Burns & McDonnell Engineering Co, Inc.

date	detailed
04/24/2023	S. JESBERG
designed	checked
T. RENSHAW	B. WINTER

PDX FUEL COMPANY L.L.C

PORTLAND INTERNATIONAL AIRPORT
5000 NE MARINE DR.
PORTLAND, OREGON 97218

PDX FACILITY IMPROVEMENTS
HYDRANT CART TEST STAND SCHEMATIC

project	contract
153929	

drawing **E-611** rev. **A**

file 153929E-611.dwg

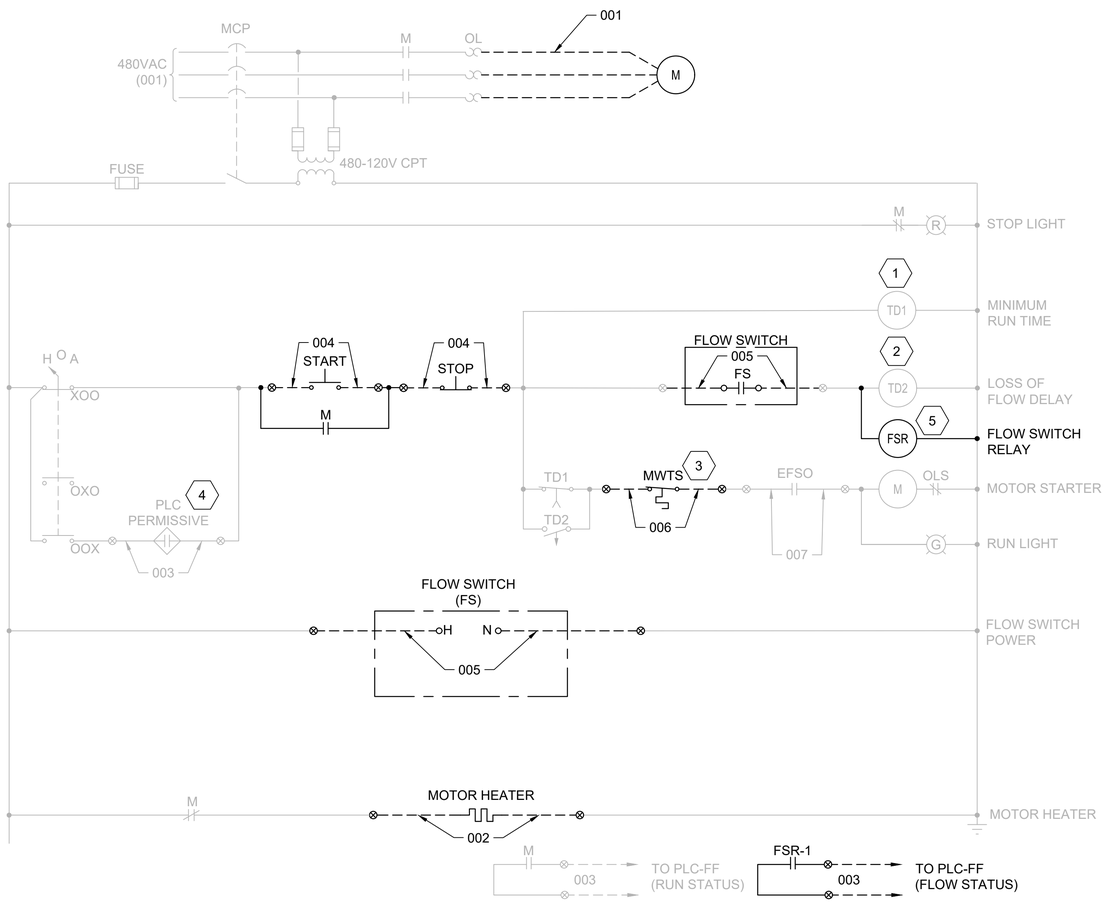

CORRESPONDING CIRCUIT NUMBERS							
	001	002	003	004	005	006	007
OP-1	P.MCC1.OP1	C.HTR.OP1	C.FSC.OP1	C.HS.OP1	C.FS.OP1	C.MWTS.OP1	C.EFSO.MCC.OP1
OP-2	P.MCC1.OP2	C.HTR.OP2	C.FSC.OP2	C.HS.OP2	C.FS.OP2	C.MWTS.OP2	C.EFSO.MCC.OP2

DETAIL 1 -

WIRING DIAGRAM - MOTOR CONTROLLER (OP-1) (OP-2)

NOT TO SCALE

NOTES:

1. SEE SHEET E-001 FOR GENERAL NOTES, LEGEND AND ABBREVIATIONS.

KEYED NOTES:

1. TD1 CONTACT SHALL BE NORMALLY CLOSED, DELAY TO OPEN WHEN TD1 RELAY IS ENERGIZED. DELAY SHALL BE ADJUSTABLE FROM 1-60 SECONDS. INITIAL SETTING SHALL BE 10 SECONDS, ADJUST AS NECESSARY.
2. TD2 CONTACT SHALL BE NORMALLY OPEN, CLOSES ON TD2 ENERGIZATION AND DELAY TO OPEN ON TD2 DE-ENERGIZATION. DELAY SHALL BE ADJUSTABLE FROM 1-60 SECONDS. INITIAL SETTING SHALL BE 5 SECONDS, ADJUST AS NECESSARY.
3. MOTOR WINDING TEMPERATURE SWITCH. WINDING TEMPERATURE SWITCH SHALL BE WIRED DIRECTLY BETWEEN THE OFFLOAD PUMP AND THE MOTOR CONTROL BUCKET.
4. PLC PERMISSIVE SHALL BE PROGRAMMED SUCH THAT THE OFFLOAD PUMP SHALL NOT BE ALLOWED TO START OR SHALL BE DE-ENERGIZED IF THE TANK HIGH-HIGH LEVEL ALARM IS DETECTED ON THE RECEIVING TANK.
5. INSTALL NEW RELAY FOR FLOW SWITCH STATUS.

no.	date	by	ckd	description
A	12/21/23	TSR	BAW	ISSUED FOR PERMIT

ISSUED FOR PERMIT ONLY

BURNS McDONNELL
9400 WARD PARKWAY
KANSAS CITY, MO 64114
816-333-9400
Burns & McDonnell Engineering Co, Inc.

date	detailed
04/24/2023	S. JESBERG
designed	checked
T. RENSHAW	B. WINTER

PDX FUEL COMPANY L.L.C

PORTLAND INTERNATIONAL AIRPORT
5000 NE MARINE DR.
PORTLAND, OREGON 97218

PDX FACILITY IMPROVEMENTS
OFFLOAD PUMP SCHEMATIC

12/20/2023

REGISTERED PROFESSIONAL ENGINEER 100084PE OREGON JULY 12, 2022 TIMOTHY RENSHAW
EXPIRES: 12/31/2024

project	contract
153929	

drawing **E-612** rev. **A**

file 153929E-612.dwg

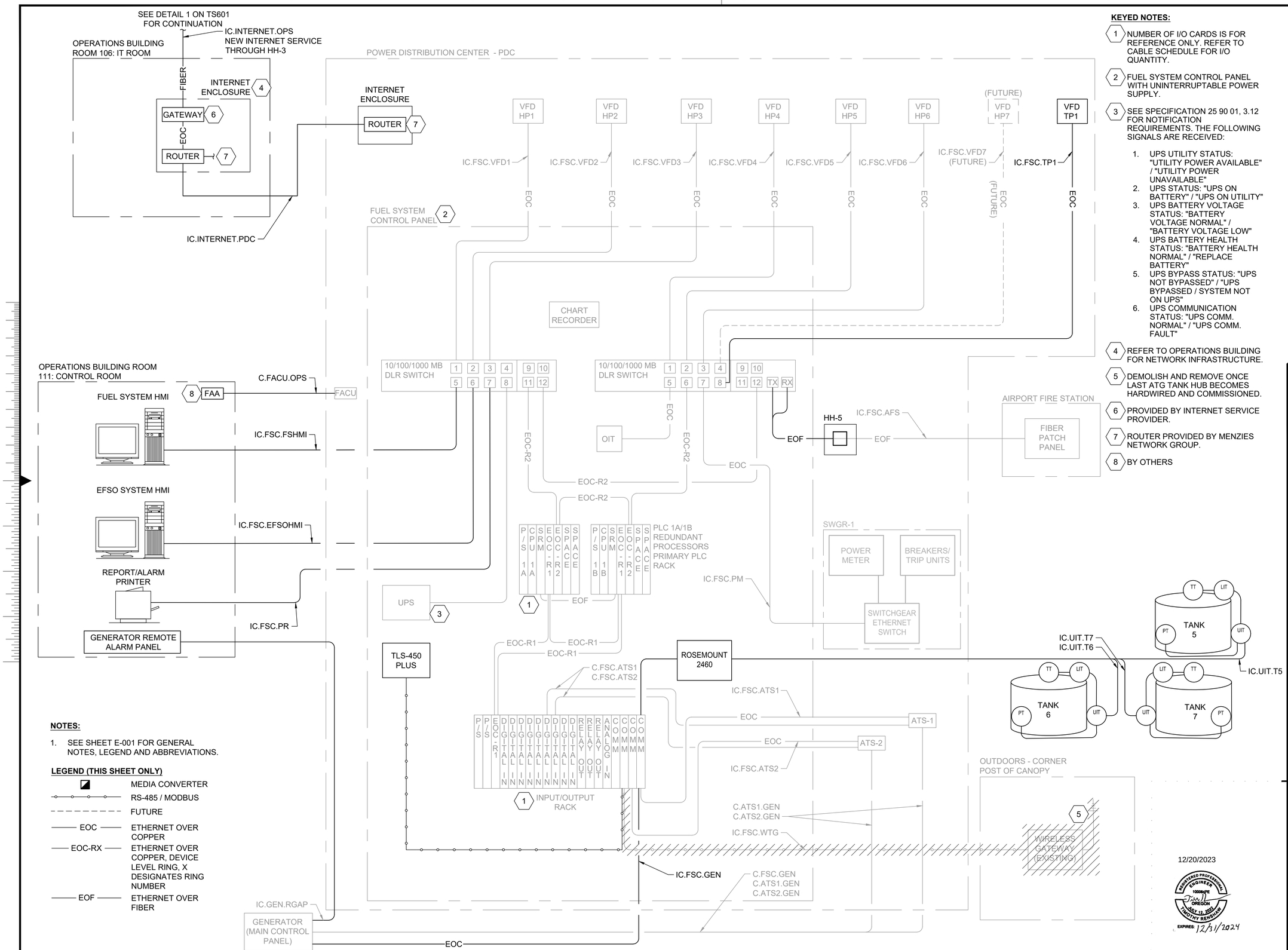

KEYED NOTES:

1. NUMBER OF I/O CARDS IS FOR REFERENCE ONLY. REFER TO CABLE SCHEDULE FOR I/O QUANTITY.
2. FUEL SYSTEM CONTROL PANEL WITH UNINTERRUPTABLE POWER SUPPLY.
3. SEE SPECIFICATION 25 90 01, 3.12 FOR NOTIFICATION REQUIREMENTS. THE FOLLOWING SIGNALS ARE RECEIVED:
   1. UPS UTILITY STATUS: "UTILITY POWER AVAILABLE" / "UTILITY POWER UNAVAILABLE"
   2. UPS STATUS: "UPS ON BATTERY" / "UPS ON UTILITY"
   3. UPS BATTERY VOLTAGE STATUS: "BATTERY VOLTAGE NORMAL" / "BATTERY VOLTAGE LOW"
   4. UPS BATTERY HEALTH STATUS: "BATTERY HEALTH NORMAL" / "REPLACE BATTERY"
   5. UPS BYPASS STATUS: "UPS NOT BYPASSED" / "UPS BYPASSED / SYSTEM NOT ON UPS"
   6. UPS COMMUNICATION STATUS: "UPS COMM. NORMAL" / "UPS COMM. FAULT"
4. REFER TO OPERATIONS BUILDING FOR NETWORK INFRASTRUCTURE.
5. DEMOLISH AND REMOVE ONCE LAST ATG TANK HUB BECOMES HARDWIRED AND COMMISSIONED.
6. PROVIDED BY INTERNET SERVICE PROVIDER.
7. ROUTER PROVIDED BY MENZIES NETWORK GROUP.
8. BY OTHERS

NOTES:

1. SEE SHEET E-001 FOR GENERAL NOTES, LEGEND AND ABBREVIATIONS.

LEGEND (THIS SHEET ONLY)

- MEDIA CONVERTER
- RS-485 / MODBUS
- FUTURE
- EOC — ETHERNET OVER COPPER
- EOC-RX — ETHERNET OVER COPPER, DEVICE LEVEL RING, X DESIGNATES RING NUMBER
- EOF — ETHERNET OVER FIBER

no.	date	by	ckd	description
A	12/21/23	TSR	BAW	ISSUED FOR PERMIT

ISSUED FOR PERMIT ONLY

BURNS McDONNELL
9400 WARD PARKWAY
KANSAS CITY, MO 64114
816-333-9400
Burns & McDonnell Engineering Co, Inc.

date	detailed
04/24/2023	S. JESBERG
designed	checked
T. RENSHAW	B. WINTER

PDX FUEL COMPANY L.L.C

PORTLAND INTERNATIONAL AIRPORT
5000 NE MARINE DR.
PORTLAND, OREGON 97218

PDX FACILITY IMPROVEMENTS
NETWORK ARCHITECTURE LAYOUT FINAL

project	contract
153929	

drawing **E-614** rev. **A**

file 153929E-614.dwg

12/20/2023

REGISTERED PROFESSIONAL ENGINEER 100084PE OREGON JULY 12, 2022 TIMOTHY RENSHAW
EXPIRES: 12/31/2024

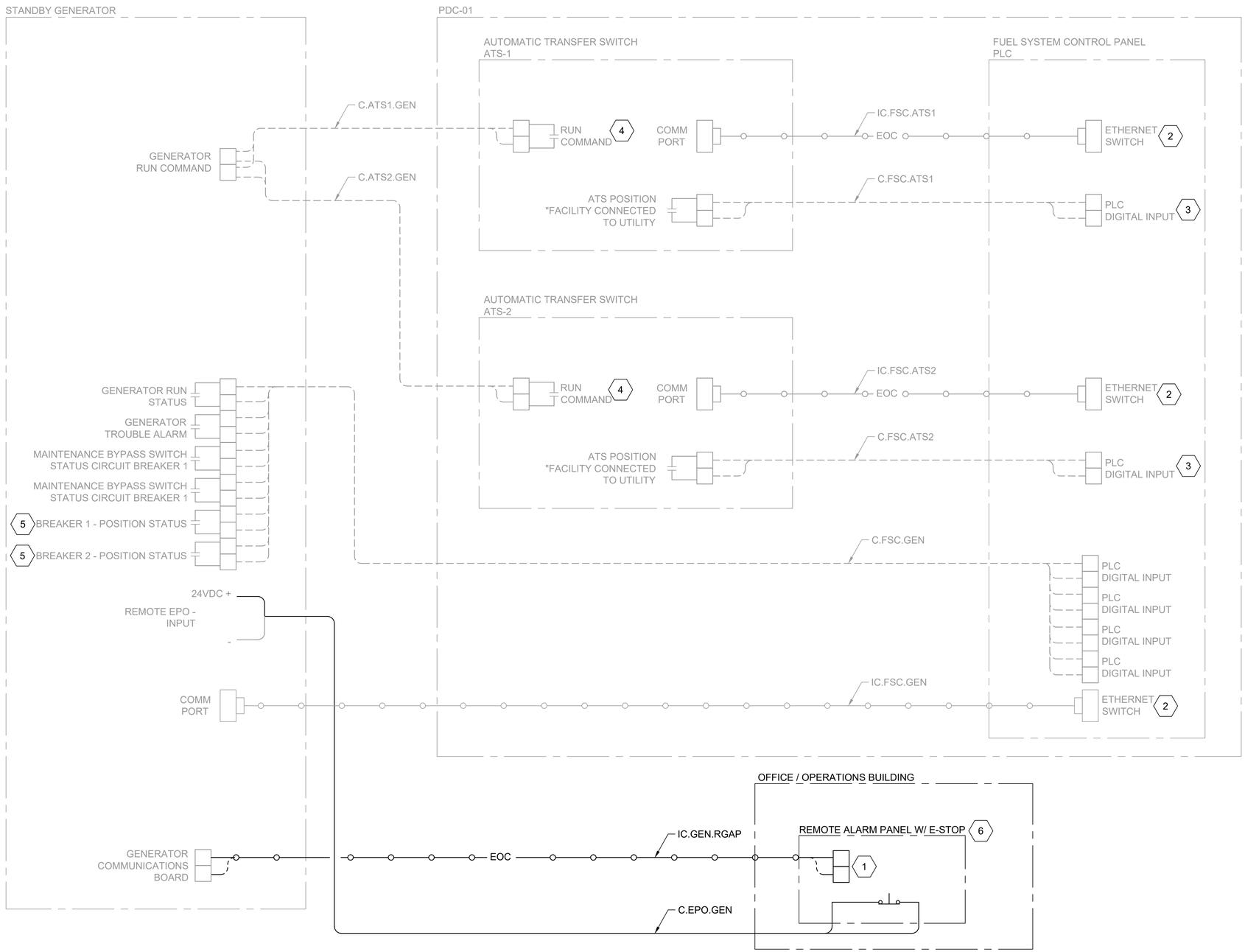

DIAGRAM 1 / -

WIRING DIAGRAM - GENERATORS

NOT TO SCALE

NOTES:

1. SEE SHEET E-001 FOR GENERAL NOTES, LEGEND AND ABBREVIATIONS.

KEYED NOTES:

1. SEE SPECIFICATION 25 90 01, 3.09 FOR NOTIFICATION REQUIREMENTS. THE FOLLOWING SIGNALS ARE RECEIVED:
   1. LUBE OIL TEMPERATURE HIGH
   2. LUBE OIL LOW PRESSURE
   3. WATER JACKET TEMPERATURE HIGH
   4. WATER JACKET TEMPERATURE LOW
   5. FUEL LEVEL LOW
   6. LOW COOLANT LEVEL
   7. OVERSPEED
   8. OVERCRANK
2. SEE SPECIFICATION 25 90 01, 3.09 FOR NOTIFICATION REQUIREMENTS. THE FOLLOWING SIGNALS ARE RECEIVED:
   1. FACILITY CONNECTED TO NORMAL POWER
   2. FACILITY CONNECTED TO DIESEL GENERATOR POWER
3. WIRED NORMALLY OPEN.
   CONTACT CLOSED = "FACILITY CONNECTED TO UTILITY"
   CONTACT OPEN = "FACILITY NOT CONNECTED TO UTILITY"
4. WIRED NORMALLY OPEN.
   CONTACT CLOSED = "START GENERATOR"
   CONTACT OPEN = "STOP GENERATOR"
5. WIRED NORMALLY OPEN.
   CONTACT CLOSED = "BREAKER CLOSED"
   CONTACT OPEN = "BREAKER OPEN"
6. PROVIDE 120V POWER FROM NEAREST SOURCE

LEGEND (THIS SHEET ONLY):

– – – WIRING PROVIDED BY SUBCONTRACTOR

no.	date	by	ckd	description
A	12/21/23	TSR	BAW	ISSUED FOR PERMIT

ISSUED FOR PERMIT ONLY

BURNS McDONNELL
9400 WARD PARKWAY
KANSAS CITY, MO 64114
816-333-9400
Burns & McDonnell Engineering Co, Inc.

date	detailed
04/24/2023	S. JESBERG
designed	checked
T. RENSHAW	B. WINTER

PDX FUEL COMPANY L.L.C

PORTLAND INTERNATIONAL AIRPORT
5000 NE MARINE DR.
PORTLAND, OREGON 97218

PDX FACILITY IMPROVEMENTS
WIRING DIAGRAM - GENERATORS

project	contract
153929	

drawing **E-618** rev. **A**

file 153929E-618.dwg

12/20/2023

REGISTERED PROFESSIONAL ENGINEER 100084PE OREGON JULY 12, 2022 TIMOTHY RENSHAW

EXPIRES: 12/31/2024

\\BMCD.BURNSMCD.COM\DFS\CLIENTS\ANF\PORTLANDPORT\PDX\153929_FACILITYIMPRV\DESIGN\ELEC\SHEETS\153929E-618.DWG 12/20/2023 7:32 AM JLITTLE

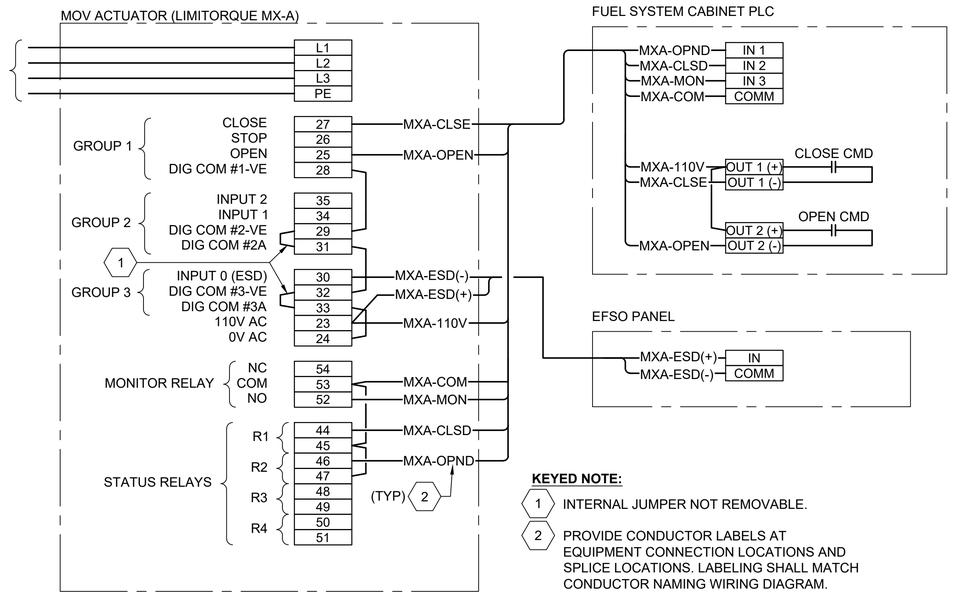

KEYED NOTE:

1. INTERNAL JUMPER NOT REMOVABLE.
2. PROVIDE CONDUCTOR LABELS AT EQUIPMENT CONNECTION LOCATIONS AND SPLICE LOCATIONS. LABELING SHALL MATCH CONDUCTOR NAMING WIRING DIAGRAM.

DIAGRAM 1 -

WIRING DIAGRAM - RECLAIM TANK SUCTION NOZZLE MOV

NOT TO SCALE

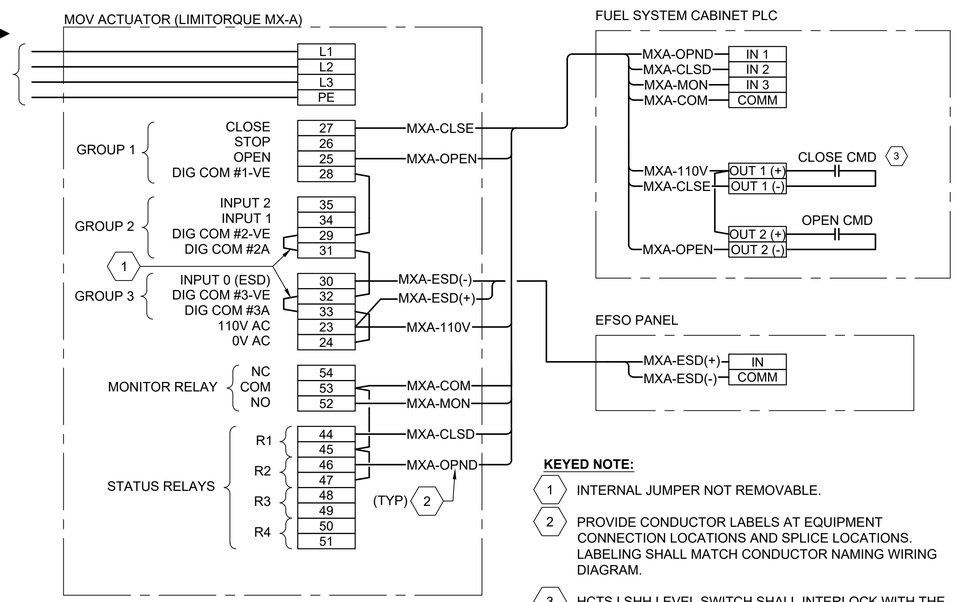

KEYED NOTE:

1. INTERNAL JUMPER NOT REMOVABLE.
2. PROVIDE CONDUCTOR LABELS AT EQUIPMENT CONNECTION LOCATIONS AND SPLICE LOCATIONS. LABELING SHALL MATCH CONDUCTOR NAMING WIRING DIAGRAM.
3. HCTS LSHH LEVEL SWITCH SHALL INTERLOCK WITH THE CLOSE COMMAND SUCH THAT THE MOV SHALL CLOSE IF THE LEVEL SWITCH IS ACTIVATED AND SHALL NOT OPEN AGAIN UNTIL THE LEVEL SWITCH IS DEACTIVATED.

DIAGRAM 2 -

WIRING DIAGRAM - RECLAIM TANK FILL NOZZLE MOV

NOT TO SCALE

NOTES:

1. SEE SHEET E-001 FOR GENERAL NOTES, LEGEND AND ABBREVIATIONS.

LEGEND (THIS SHEET ONLY):

◕ PLC TERMINAL FOR FIELD WIRING

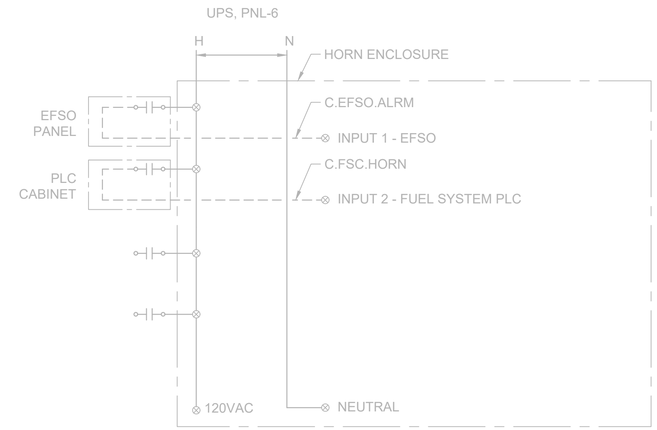

DIAGRAM 3 -

ALARM HORN WIRING DIAGRAM

NOT TO SCALE

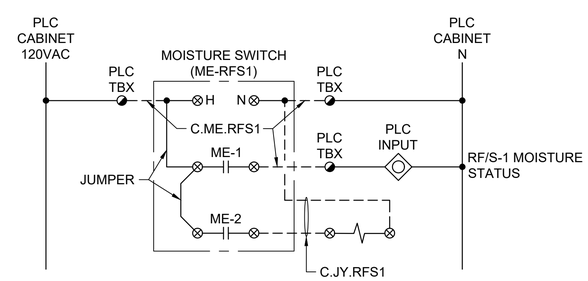

DIAGRAM 4 -

MOISTURE SENSOR - RECLAIM FILTER SEPARATOR

NOT TO SCALE

no.	date	by	ckd	description
A	12/21/23	TSR	BAW	ISSUED FOR PERMIT

ISSUED FOR PERMIT ONLY

BURNS McDONNELL
9400 WARD PARKWAY
KANSAS CITY, MO 64114
816-333-9400
Burns & McDonnell Engineering Co, Inc.

date	detailed
04/24/2023	S. JESBERG
designed	checked
T. RENSHAW	B. WINTER

PDX FUEL COMPANY L.L.C

PORTLAND INTERNATIONAL AIRPORT
5000 NE MARINE DR.
PORTLAND, OREGON 97218

PDX FACILITY IMPROVEMENTS

WIRING DIAGRAM - MOVS

project	contract
153929	

drawing **E-619** rev. **A**

file 153929E-619.dwg

12/20/2023

REGISTERED PROFESSIONAL ENGINEER 100084PE OREGON JULY 12, 2022 TIMOTHY RENSHAW

EXPIRES: 12/31/2024

Scale For Microfilming: Millimeters / Inches

KEYED NOTES:

1. SIZE BASED ON VENDOR EQUIPMENT SELECTIONS.
2. THE PANEL SHALL INCLUDE DIN-RAIL MOUNTED SURGE PROTECTION PER UL1449 WITH PLUGGABLE REPLACEABLE SPD ELEMENTS.
3. THE ENTIRE PANEL AND ALL ITS COMPONENTS SHALL BE LISTED AND ASSEMBLED IN A UL 508A CERTIFIED SHOP AND SHALL BE RATED FOR INSTALLATION IN CLASS I DIVISION 2 AREA, OUTDOOR RATED, NEMA 4X STAINLESS STEEL.

LEGEND (THIS SHEET ONLY):

◨ TERMINAL IN PLC OR ALARM PANEL

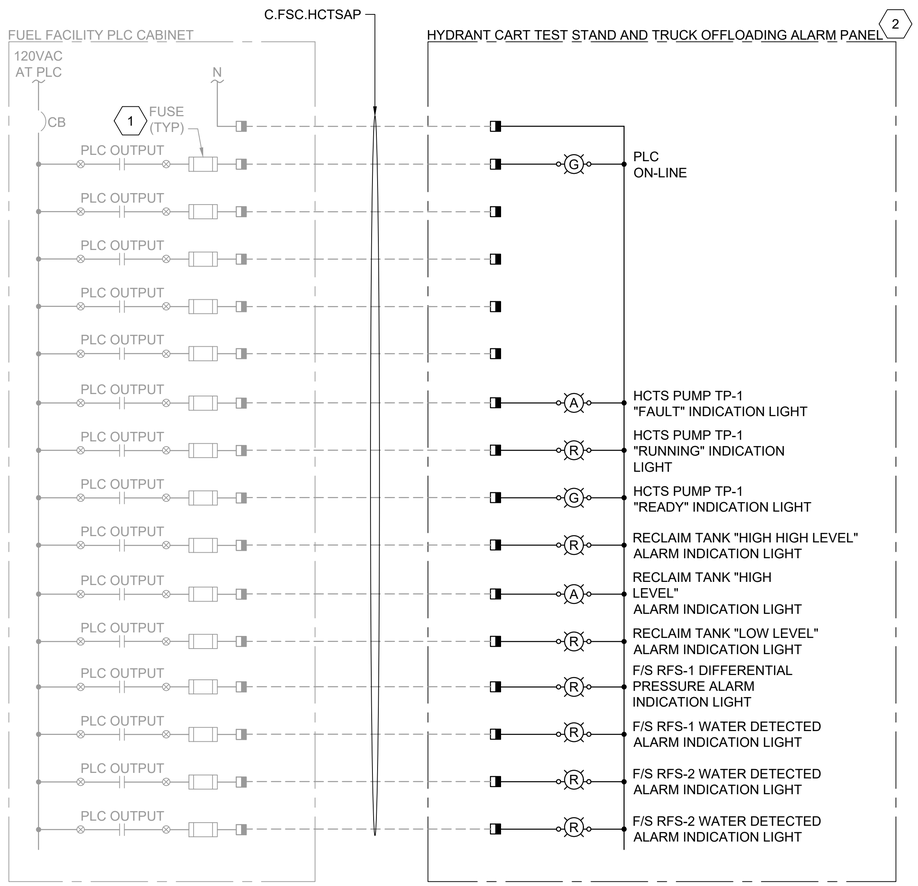

DETAIL 1/-

WIRING DIAGRAM - HCTS ALARM PANEL

NOT TO SCALE

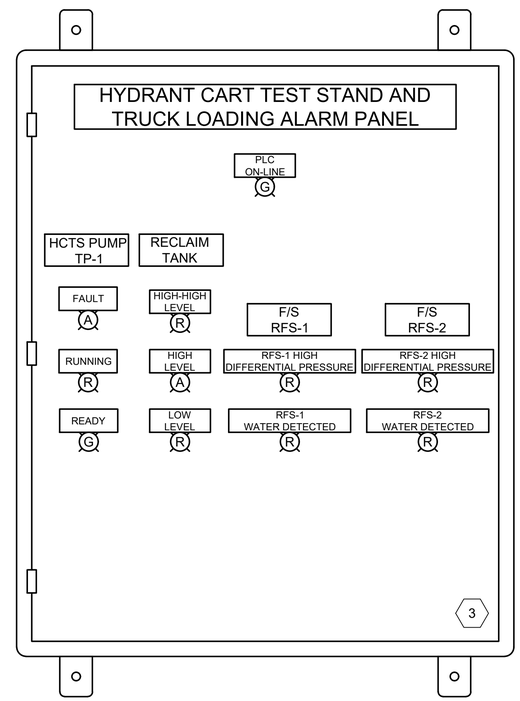

DETAIL 2/-

HCTS ALARM PANEL - EXTERIOR

NOT TO SCALE

no.	date	by	ckd	description
A	12/21/23	TSR	BAW	ISSUED FOR PERMIT

ISSUED FOR PERMIT ONLY

BURNS McDONNELL
9400 WARD PARKWAY
KANSAS CITY, MO 64114
816-333-9400
Burns & McDonnell Engineering Co, Inc.

date	detailed
04/24/2023	S. JESBERG
designed	checked
T. RENSHAW	B. WINTER

PDX FUEL COMPANY L.L.C

PORTLAND INTERNATIONAL AIRPORT
5000 NE MARINE DR.
PORTLAND, OREGON 97218

PDX FACILITY IMPROVEMENTS

HCTS CONTROL PANEL WIRING DIAGRAM

project	contract
153929	

drawing **E-620** rev. **A**

file 153929E-620.dwg

12/20/2023

REGISTERED PROFESSIONAL ENGINEER 100084PE OREGON JULY 12, 2022 TIMOTHY RENSHAW

EXPIRES: 12/31/2024

FIELD

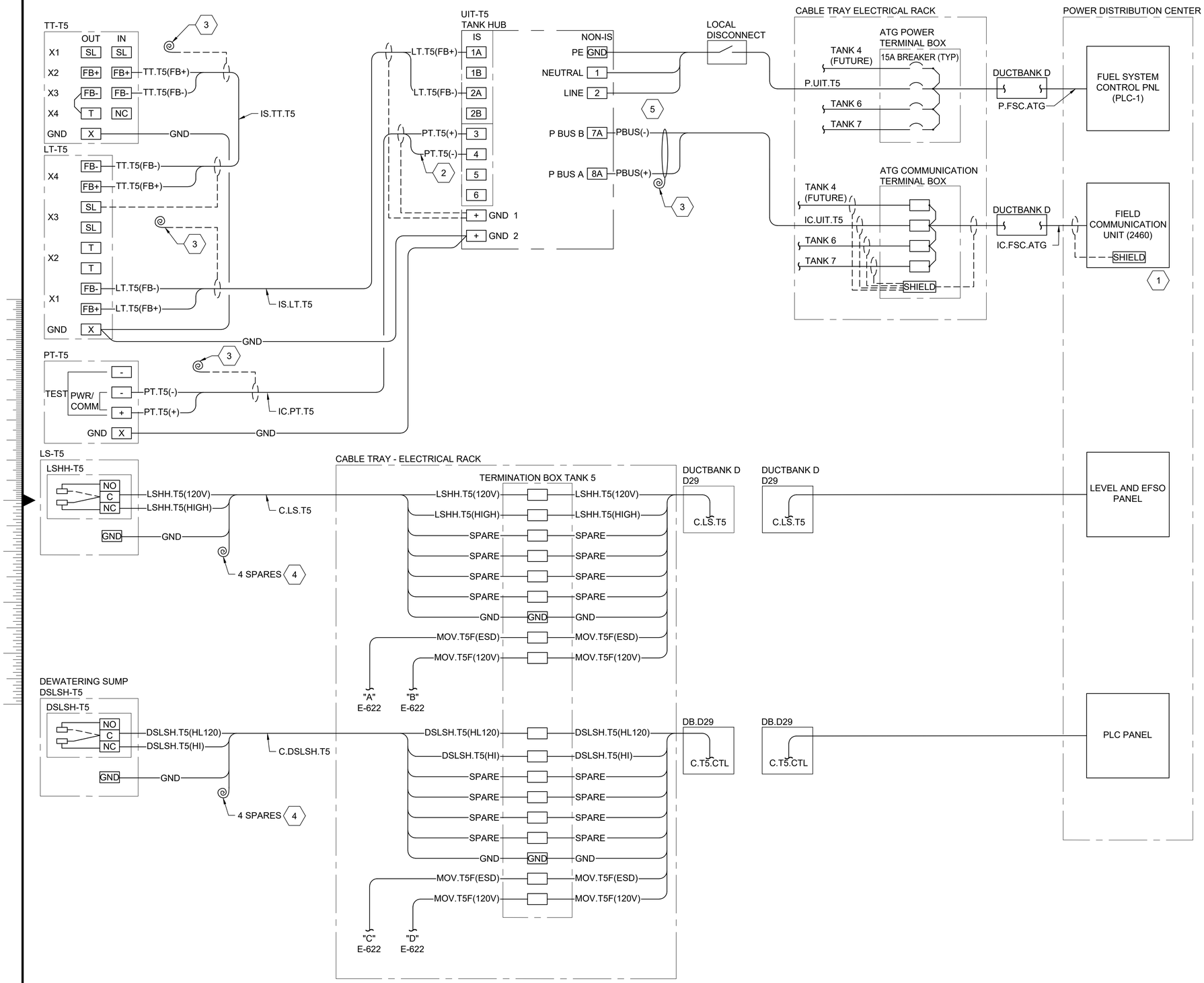

NOTES:

1. WIRING SHOWN IS THAT OF JET FUEL TANK 5 (T5). FOR CLARITY THE TAGS AND DESCRIPTORS SHOWN ARE SPECIFIC TO T5.
2. THE WIRING DIAGRAM CONVEYS OVERALL QUANTITIES AND ORIGINATION OF SYSTEM SIGNALS. CONSULT THE EQUIPMENT MANUFACTURERS LITERATURE FOR EXACT TERMINATION POINTS.

KEYED NOTES:

1. SEE EI653 RISER DIAGRAM FOR COMMUNICATION INTERCONNECTIONS.
2. HART 4-20MA SIGNAL USED FOR PT.
3. TAPE SHIELD BACK
4. TAPE CONDUCTORS AND LEAVE AS SPARES
5. SPLICE CABLES SHIELDS TOGETHER. ENSURE SHIELDS ARE ISOLATED FROM TOUCHING ANY PART OF ENCLOSURE.

no.	date	by	ckd	description
A	12/21/23	TSR	BAW	ISSUED FOR PERMIT

ISSUED FOR PERMIT ONLY

BURNS McDONNELL
9400 WARD PARKWAY
KANSAS CITY, MO 64114
816-333-9400
Burns & McDonnell Engineering Co, Inc.

date	detailed
04/24/2023	S. JESBERG
designed	checked
T. RENSHAW	B. WINTER

PDX FUEL COMPANY L.L.C

PORTLAND INTERNATIONAL AIRPORT
5000 NE MARINE DR.
PORTLAND, OREGON 97218

PDX FACILITY IMPROVEMENTS
CONTROL DIAGRAM - TANK 5 - ATG

project	contract
153929	

drawing **E-621** rev. **A**

12/20/2023

REGISTERED PROFESSIONAL ENGINEER 100084PE OREGON JULY 12, 2022 TIMOTHY RENSHAW
EXPIRES: 12/31/2024

file 153929E-621.dwg

\\BMCD.BURNSMCD.COM\DFS\CLIENTS\ANF\PORTLANDPORT\PDX\153929_FACILITYIMPRV\DESIGN\ELEC\SHEETS\153929E-621.DWG 12/20/2023 7:24 AM JLITTLE

FIELD

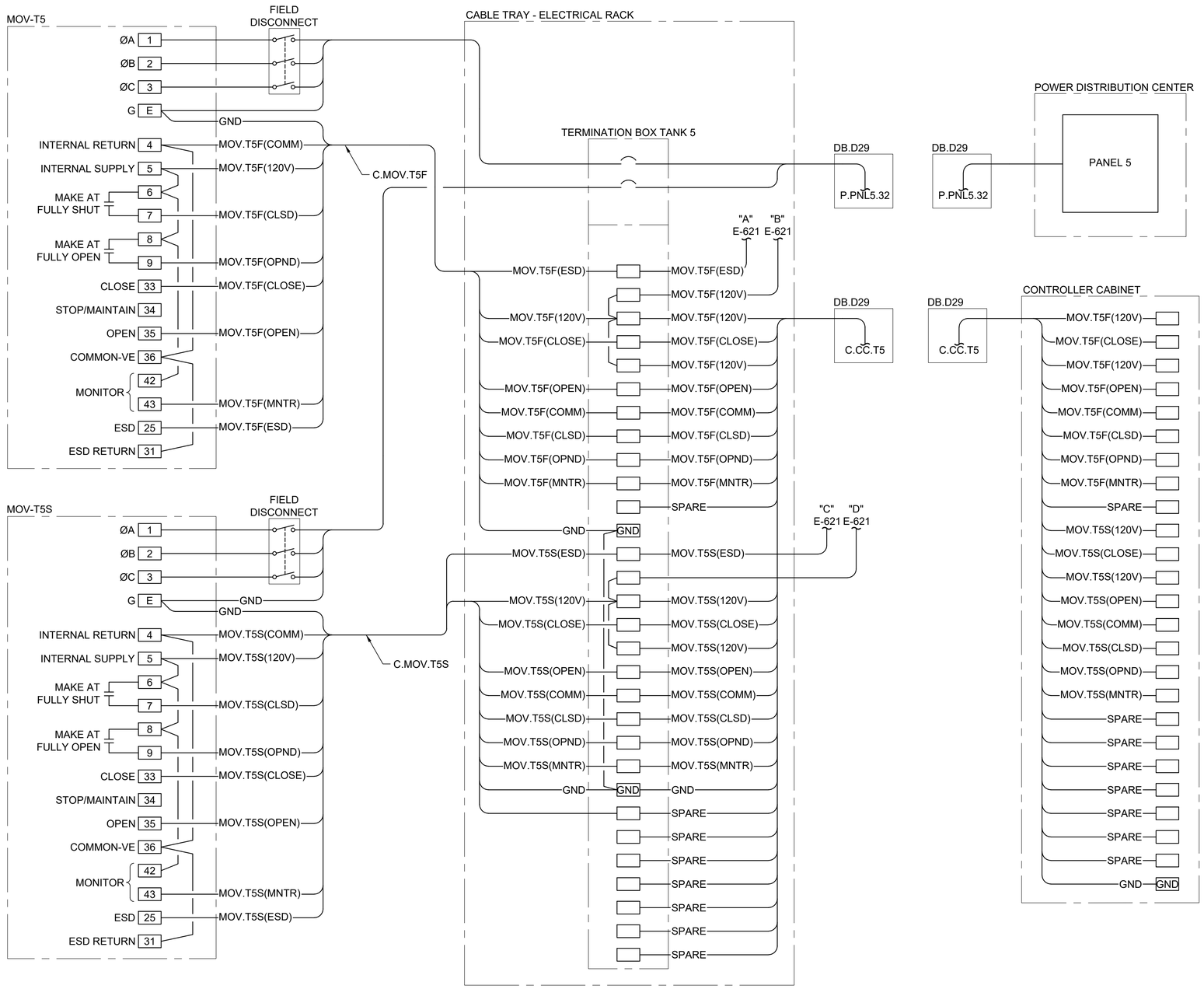

NOTES:

1. WIRING SHOWN IS THAT OF JET FUEL TANK 5 (T5). FOR CLARITY THE TAGS AND DESCRIPTORS SHOWN ARE SPECIFIC TO T5.
2. THE WIRING DIAGRAM CONVEYS OVERALL QUANTITIES AND ORIGINATION OF SYSTEM SIGNALS. CONSULT THE EQUIPMENT MANUFACTURERS LITERATURE FOR EXACT TERMINATION POINTS.

no.	date	by	ckd	description
A	12/21/23	TSR	BAW	ISSUED FOR PERMIT

ISSUED FOR PERMIT ONLY

BURNS McDONNELL
9400 WARD PARKWAY
KANSAS CITY, MO 64114
816-333-9400
Burns & McDonnell Engineering Co, Inc.

date	detailed
04/24/2023	S. JESBERG
designed	checked
T. RENSHAW	B. WINTER

PDX FUEL COMPANY L.L.C

PORTLAND INTERNATIONAL AIRPORT
5000 NE MARINE DR.
PORTLAND, OREGON 97218

PDX FACILITY IMPROVEMENTS
CONTROL DIAGRAM - TANK 5 - MOV

project	contract
153929	

drawing **E-622** rev. **A**

file 153929E-622.dwg

12/20/2023

REGISTERED PROFESSIONAL ENGINEER 100084PE OREGON JULY 12, 2022 TIMOTHY RENSHAW
EXPIRES: 12/31/2024

Millimeters
Scale For Microfilming
Inches

FIELD

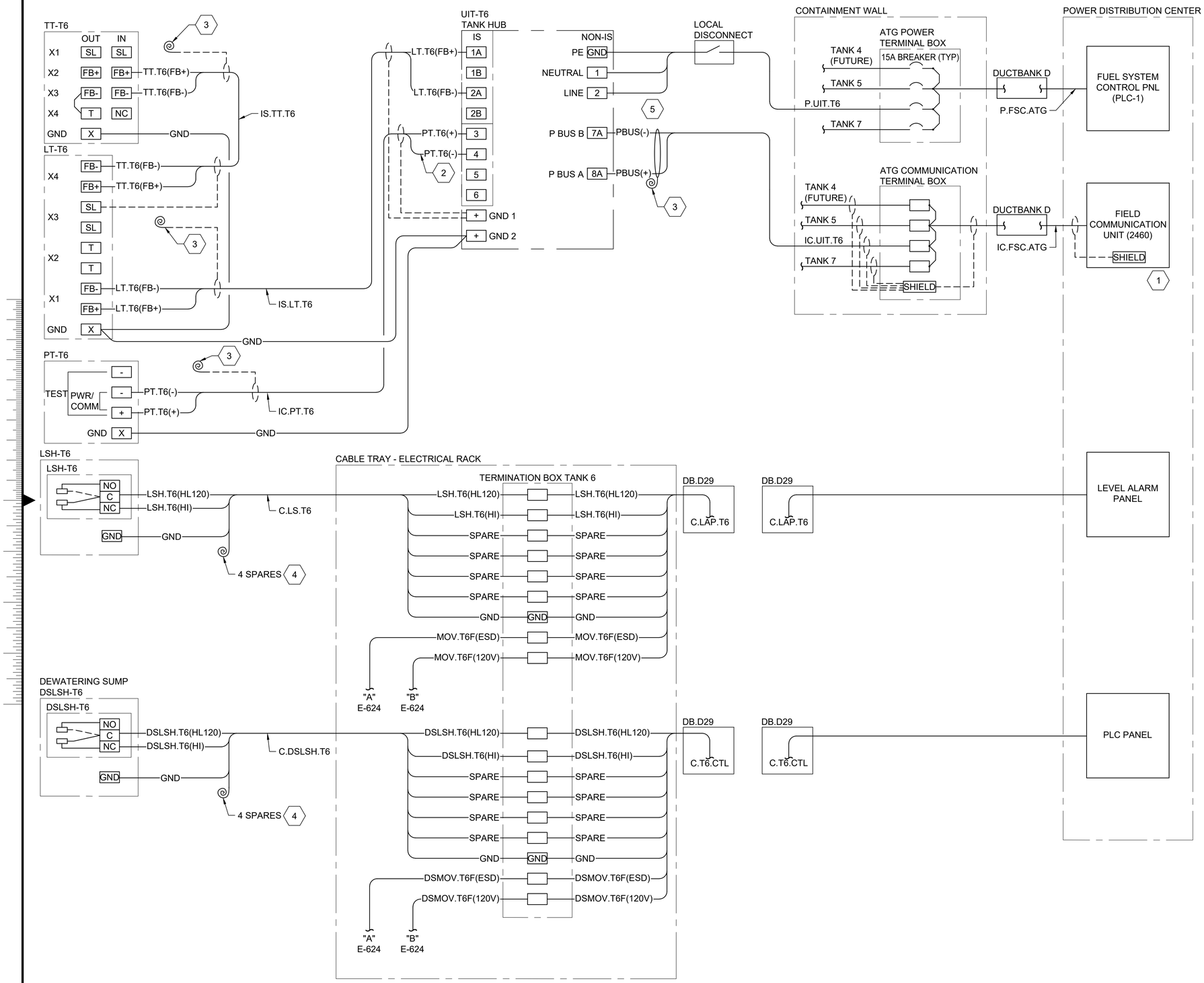

NOTES:

1. WIRING SHOWN IS THAT OF JET FUEL TANK 6 (T5). FOR CLARITY THE TAGS AND DESCRIPTORS SHOWN ARE SPECIFIC TO T5.
2. THE WIRING DIAGRAM CONVEYS OVERALL QUANTITIES AND ORIGINATION OF SYSTEM SIGNALS. CONSULT THE EQUIPMENT MANUFACTURERS LITERATURE FOR EXACT TERMINATION POINTS.

KEYED NOTES:

1. SEE EI653 RISER DIAGRAM FOR COMMUNICATION INTERCONNECTIONS.
2. HART 4-20MA SIGNAL USED FOR PT.
3. TAPE SHIELD BACK
4. TAPE CONDUCTORS AND LEAVE AS SPARES
5. SPLICE CABLES SHIELDS TOGETHER. ENSURE SHIELDS ARE ISOLATED FROM TOUCHING ANY PART OF ENCLOSURE.

no.	date	by	ckd	description
A	12/21/23	TSR	BAW	ISSUED FOR PERMIT

ISSUED FOR PERMIT ONLY

BURNS McDONNELL
9400 WARD PARKWAY
KANSAS CITY, MO 64114
816-333-9400
Burns & McDonnell Engineering Co, Inc.

date	detailed
04/24/2023	S. JESBERG
designed	checked
T. RENSHAW	B. WINTER

PDX FUEL COMPANY L.L.C

PORTLAND INTERNATIONAL AIRPORT
5000 NE MARINE DR.
PORTLAND, OREGON 97218

PDX FACILITY IMPROVEMENTS
CONTROL DIAGRAM - TANK 6 - ATG

project	contract
153929	

drawing **E-623** rev. **A**

12/20/2023

REGISTERED PROFESSIONAL ENGINEER 100084PE OREGON JULY 12, 2022 TIMOTHY RENSHAW
EXPIRES: 12/31/2024

file 153929E-623.dwg

FIELD

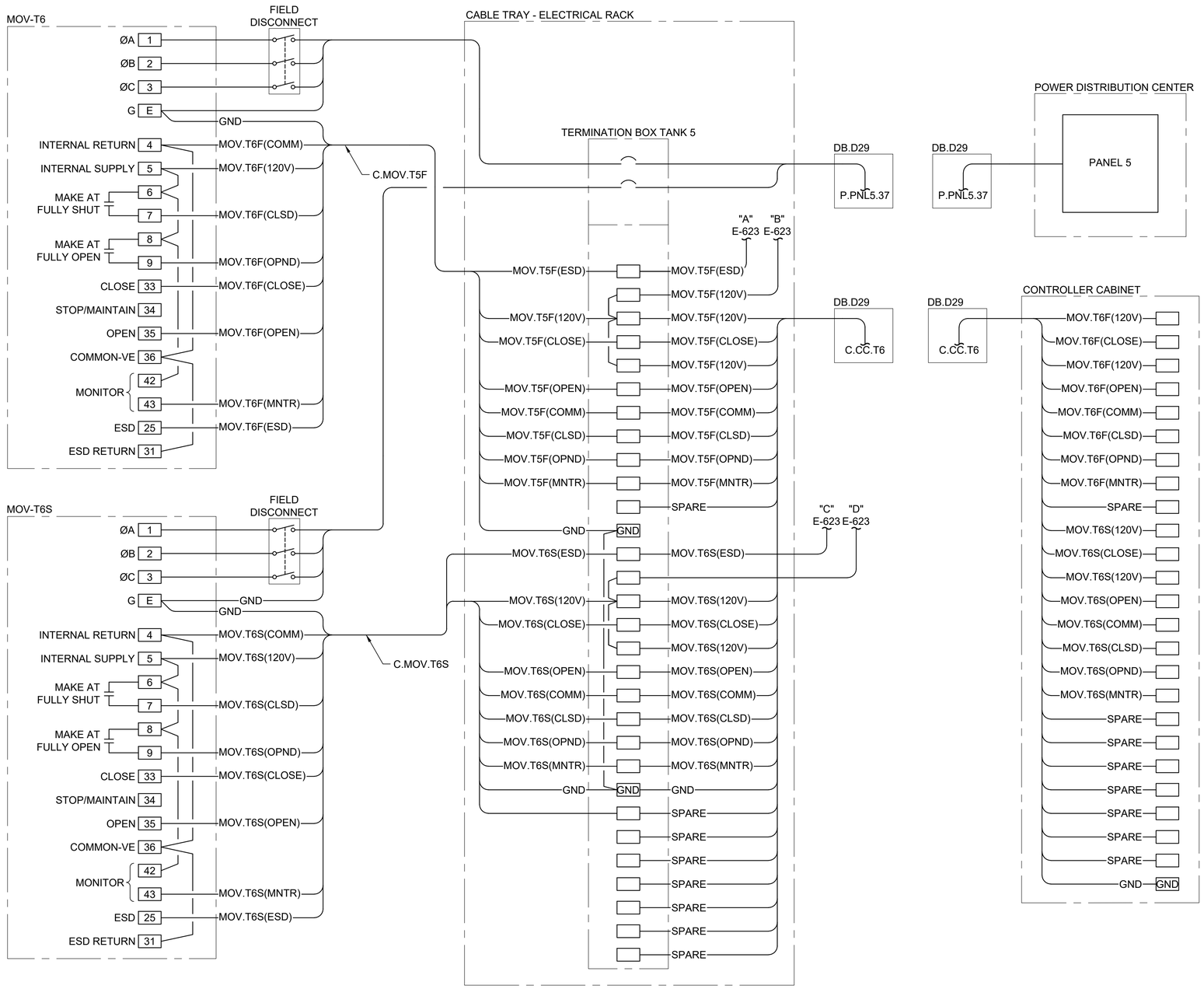

NOTES:

1. WIRING SHOWN IS THAT OF JET FUEL TANK 6 (T6). FOR CLARITY THE TAGS AND DESCRIPTORS SHOWN ARE SPECIFIC TO T6.
2. THE WIRING DIAGRAM CONVEYS OVERALL QUANTITIES AND ORIGINATION OF SYSTEM SIGNALS. CONSULT THE EQUIPMENT MANUFACTURERS LITERATURE FOR EXACT TERMINATION POINTS.

no.	date	by	ckd	description
A	12/21/23	TSR	BAW	ISSUED FOR PERMIT

ISSUED FOR PERMIT ONLY

BURNS McDONNELL
9400 WARD PARKWAY
KANSAS CITY, MO 64114
816-333-9400
Burns & McDonnell Engineering Co, Inc.

date	detailed
04/24/2023	S. JESBERG
designed	checked
T. RENSHAW	B. WINTER

PDX FUEL COMPANY L.L.C

PORTLAND INTERNATIONAL AIRPORT
5000 NE MARINE DR.
PORTLAND, OREGON 97218

PDX FACILITY IMPROVEMENTS
CONTROL DIAGRAM - TANK 6 - MOV

12/20/2023

REGISTERED PROFESSIONAL ENGINEER 100084PE OREGON JULY 12, 2022 TIMOTHY RENSHAW
EXPIRES: 12/31/2024

project	contract
153929	

drawing **E-624** rev. **A**

file 153929E-624.dwg

Scale For Microfilming: Millimeters / Inches

FIELD

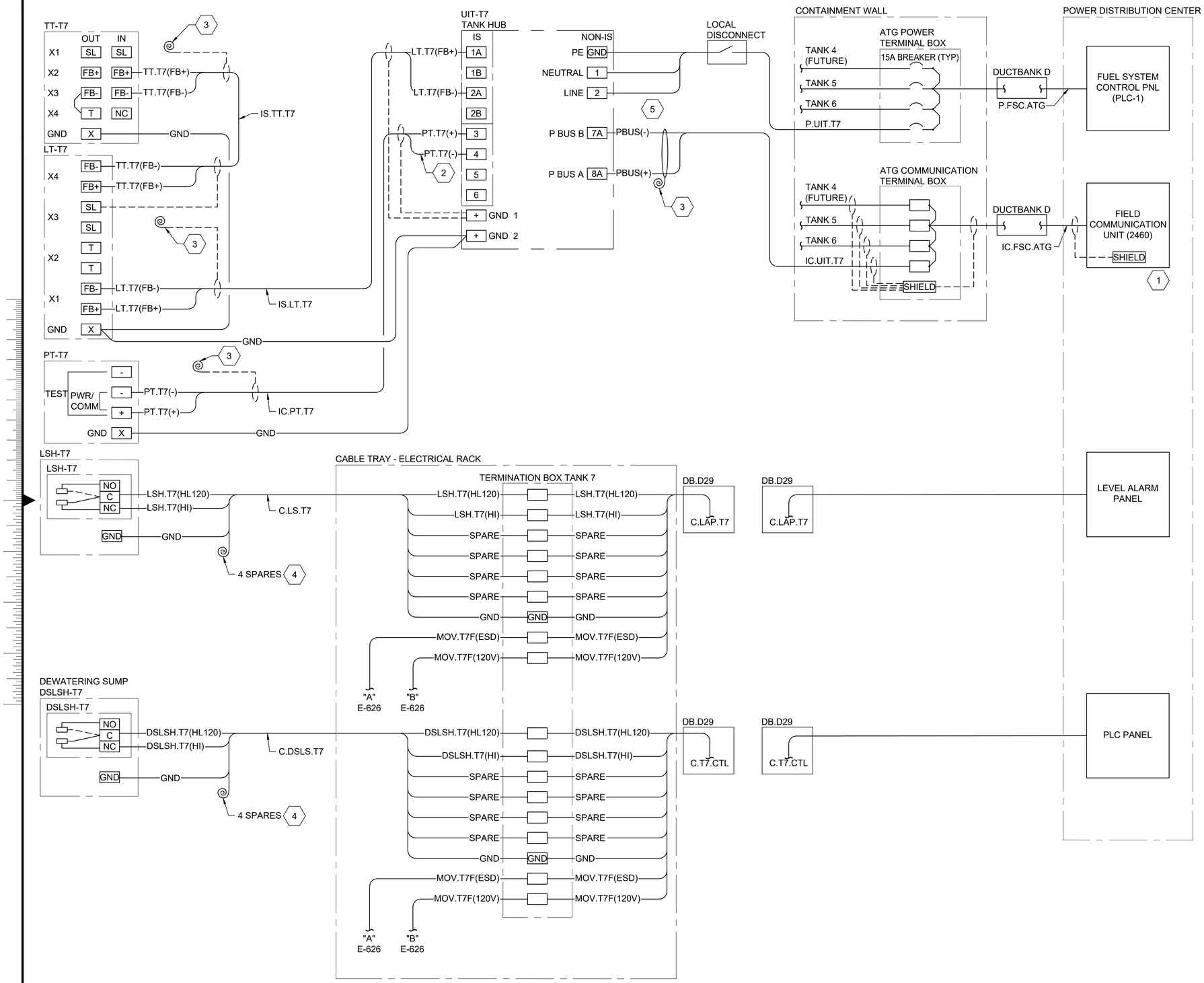

NOTES:

1. WIRING SHOWN IS THAT OF JET FUEL TANK 7 (T7). FOR CLARITY THE TAGS AND DESCRIPTORS SHOWN ARE SPECIFIC TO T7.
2. THE WIRING DIAGRAM CONVEYS OVERALL QUANTITIES AND ORIGINATION OF SYSTEM SIGNALS. CONSULT THE EQUIPMENT MANUFACTURERS LITERATURE FOR EXACT TERMINATION POINTS.

KEYED NOTES:

1. SEE EI653 RISER DIAGRAM FOR COMMUNICATION INTERCONNECTIONS.
2. HART 4-20MA SIGNAL USED FOR PT.
3. TAPE SHIELD BACK
4. TAPE CONDUCTORS AND LEAVE AS SPARES
5. SPLICE CABLES SHIELDS TOGETHER. ENSURE SHIELDS ARE ISOLATED FROM TOUCHING ANY PART OF ENCLOSURE.

no.	date	by	ckd	description
A	12/21/23	TSR	BAW	ISSUED FOR PERMIT

ISSUED FOR PERMIT ONLY

BURNS McDONNELL
9400 WARD PARKWAY
KANSAS CITY, MO 64114
816-333-9400
Burns & McDonnell Engineering Co, Inc.

date	detailed
04/24/2023	S. JESBERG
designed	checked
T. RENSHAW	B. WINTER

PDX FUEL COMPANY L.L.C

PORTLAND INTERNATIONAL AIRPORT
5000 NE MARINE DR.
PORTLAND, OREGON 97218

PDX FACILITY IMPROVEMENTS
CONTROL DIAGRAM - TANK 7 - ATG

project	contract
153929	

drawing **E-625** rev. **A**

12/20/2023

REGISTERED PROFESSIONAL ENGINEER 100084PE OREGON JULY 12, 2022 TIMOTHY RENSHAW
EXPIRES: 12/31/2024

file 153929E-625.dwg

FIELD

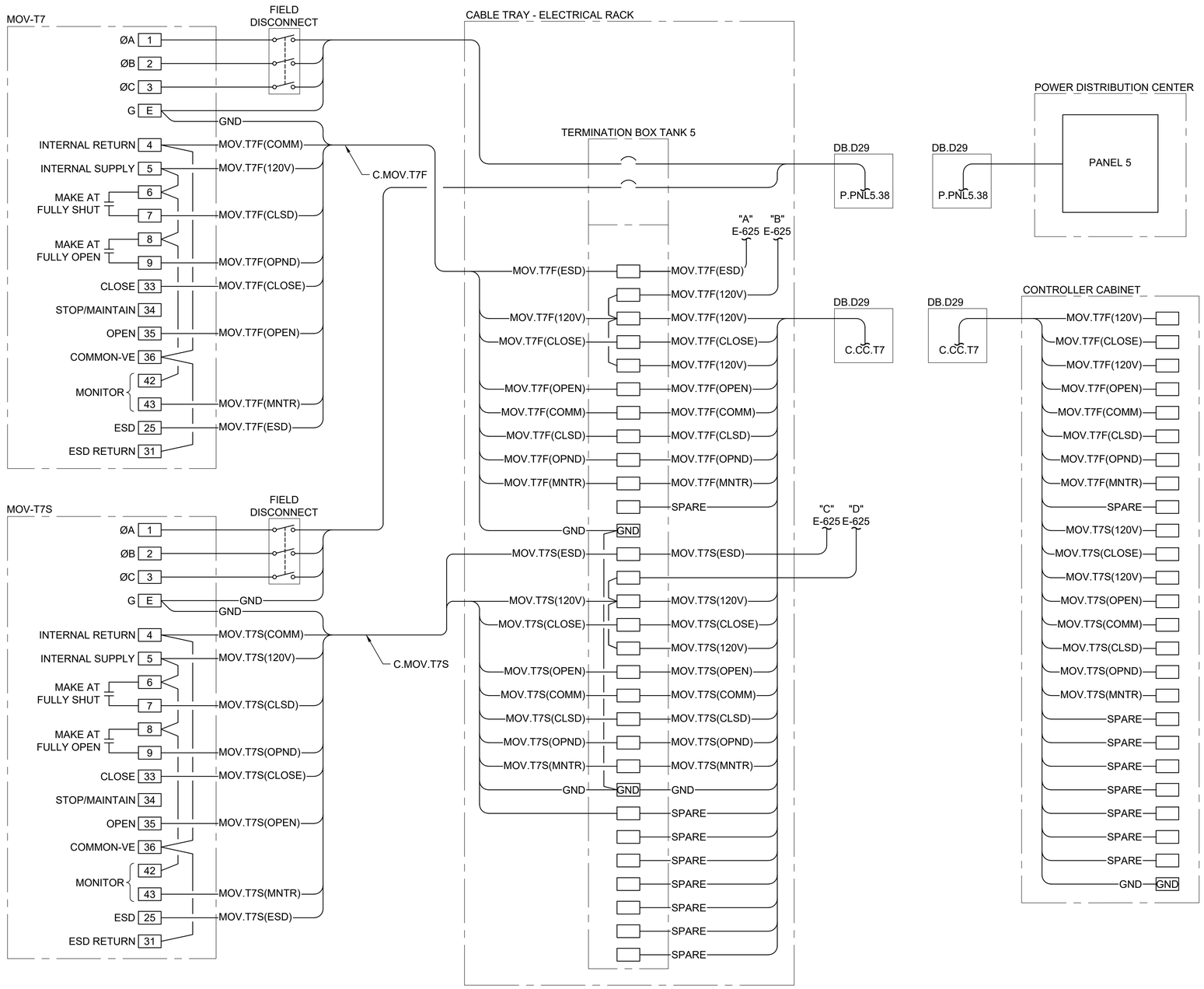

NOTES:

1. WIRING SHOWN IS THAT OF JET FUEL TANK 7 (T7). FOR CLARITY THE TAGS AND DESCRIPTORS SHOWN ARE SPECIFIC TO T7.
2. THE WIRING DIAGRAM CONVEYS OVERALL QUANTITIES AND ORIGINATION OF SYSTEM SIGNALS. CONSULT THE EQUIPMENT MANUFACTURERS LITERATURE FOR EXACT TERMINATION POINTS.

no.	date	by	ckd	description
A	12/21/23	TSR	BAW	ISSUED FOR PERMIT

ISSUED FOR PERMIT ONLY

BURNS McDONNELL
9400 WARD PARKWAY
KANSAS CITY, MO 64114
816-333-9400
Burns & McDonnell Engineering Co, Inc.

date	detailed
04/24/2023	S. JESBERG
designed	checked
T. RENSHAW	B. WINTER

PDX FUEL COMPANY L.L.C

PORTLAND INTERNATIONAL AIRPORT
5000 NE MARINE DR.
PORTLAND, OREGON 97218

PDX FACILITY IMPROVEMENTS
CONTROL DIAGRAM - TANK 7 - MOV

project	contract
153929	

drawing **E-626** rev. **A**

file 153929E-626.dwg

12/20/2023

REGISTERED PROFESSIONAL ENGINEER 100084PE OREGON JULY 12, 2022 TIMOTHY RENSHAW

EXPIRES: 12/31/2024

Scale For Microfilming: Millimeters / Inches

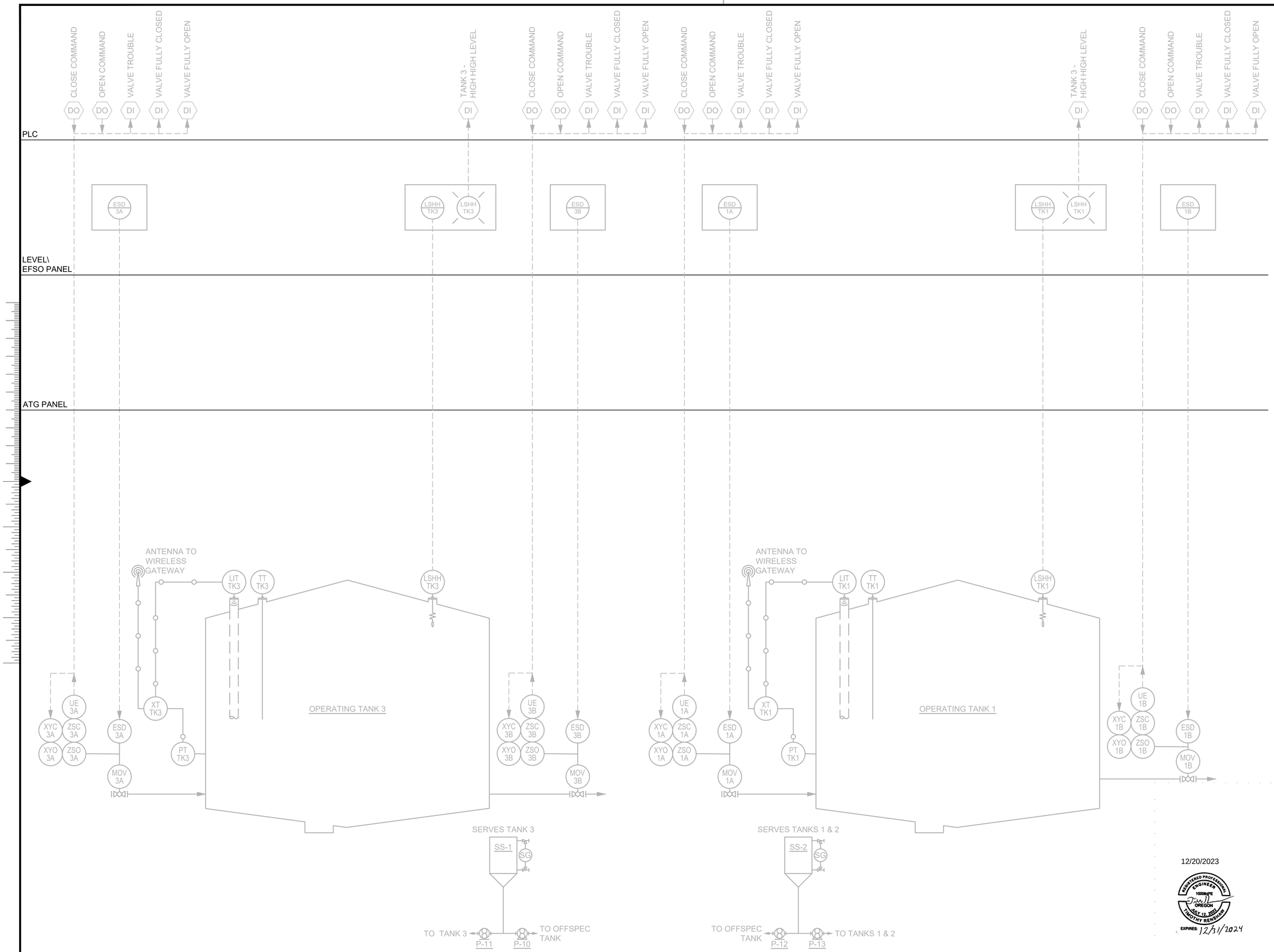

12/20/2023

REGISTERED PROFESSIONAL ENGINEER 100084PE OREGON JULY 12, 2022 TIMOTHY RENSHAW

EXPIRES: 12/31/2024

no.	date	by	ckd	description
A	12/21/23	TSR	BAW	ISSUED FOR PERMIT

ISSUED FOR PERMIT ONLY

BURNS McDONNELL
9400 WARD PARKWAY
KANSAS CITY, MO 64114
816-333-9400
Burns & McDonnell Engineering Co, Inc.

date	detailed
04/24/2023	S. JESBERG
designed	checked
T. RENSHAW	B. WINTER

PDX FUEL COMPANY L.L.C

PORTLAND INTERNATIONAL AIRPORT
5000 NE MARINE DR.
PORTLAND, OREGON 97218

PDX FACILITY IMPROVEMENTS
CONTROL SYSTEM IO - RISER DIAGRAM - STORAGE - EXISTING

project	contract
153929	

drawing **EI651** rev. **A**

file 153929EI651.dwg

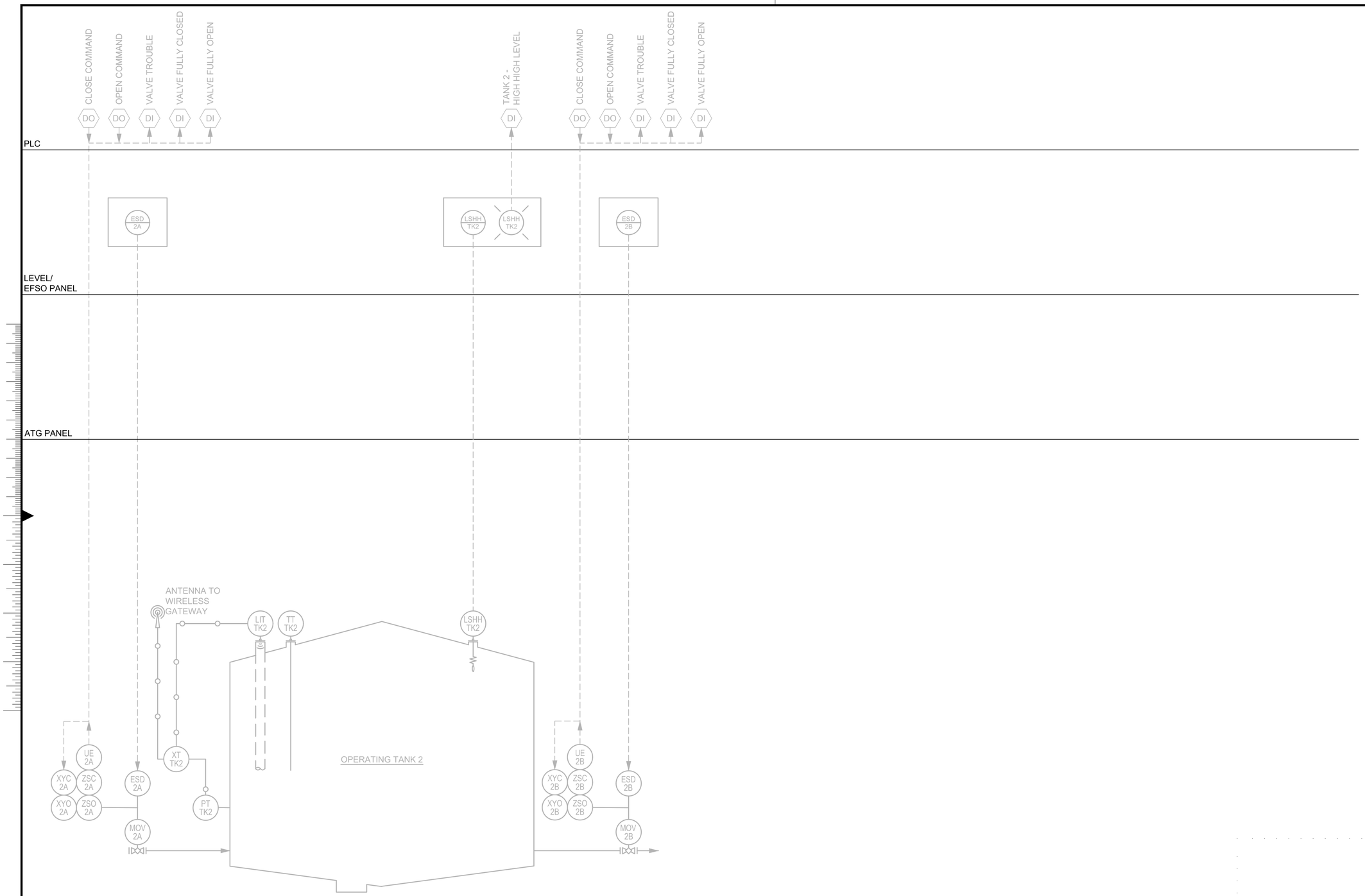

no.	date	by	ckd	description
A	12/21/23	TSR	BAW	ISSUED FOR PERMIT

ISSUED FOR PERMIT ONLY

BURNS McDONNELL
9400 WARD PARKWAY
KANSAS CITY, MO 64114
816-333-9400
Burns & McDonnell Engineering Co, Inc.

date	detailed
04/24/2023	S. JESBERG
designed	checked
T. RENSHAW	B. WINTER

PDX FUEL COMPANY L.L.C

PORTLAND INTERNATIONAL AIRPORT
5000 NE MARINE DR.
PORTLAND, OREGON 97218

PDX FACILITY IMPROVEMENTS

CONTROL SYSTEM IO - RISER DIAGRAM - STORAGE - EXISTING

project	contract
153929	

drawing **EI652** rev. **A**

file 153929EI652.dwg

12/20/2023

REGISTERED PROFESSIONAL ENGINEER 100084PE OREGON JULY 12, 2022 TIMOTHY RENSHAW

EXPIRES: 12/31/2024

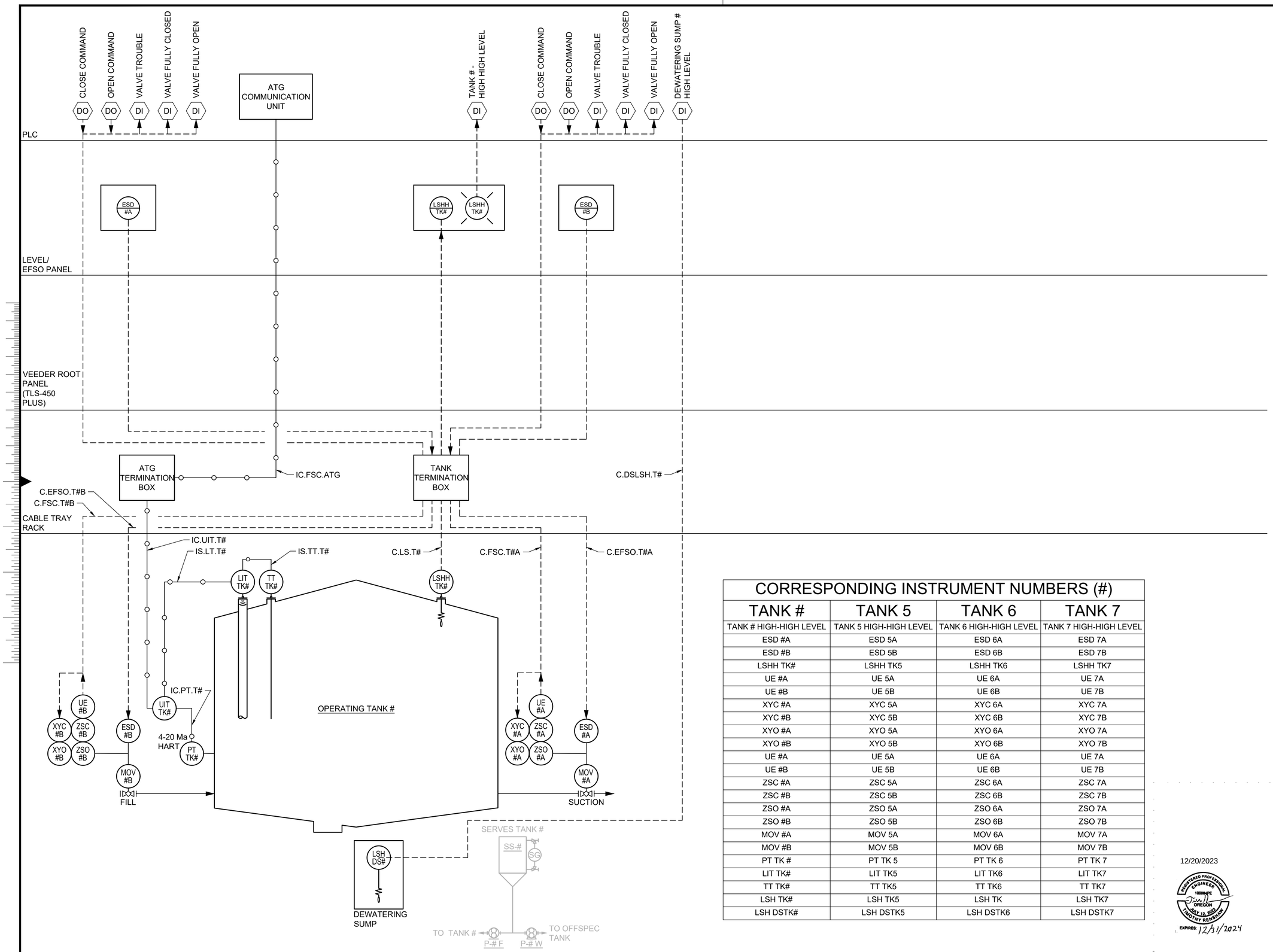

CORRESPONDING INSTRUMENT NUMBERS (#)

TANK #	TANK 5	TANK 6	TANK 7
TANK # HIGH-HIGH LEVEL	TANK 5 HIGH-HIGH LEVEL	TANK 6 HIGH-HIGH LEVEL	TANK 7 HIGH-HIGH LEVEL
ESD #A	ESD 5A	ESD 6A	ESD 7A
ESD #B	ESD 5B	ESD 6B	ESD 7B
LSHH TK#	LSHH TK5	LSHH TK6	LSHH TK7
UE #A	UE 5A	UE 6A	UE 7A
UE #B	UE 5B	UE 6B	UE 7B
XYC #A	XYC 5A	XYC 6A	XYC 7A
XYC #B	XYC 5B	XYC 6B	XYC 7B
XYO #A	XYO 5A	XYO 6A	XYO 7A
XYO #B	XYO 5B	XYO 6B	XYO 7B
UE #A	UE 5A	UE 6A	UE 7A
UE #B	UE 5B	UE 6B	UE 7B
ZSC #A	ZSC 5A	ZSC 6A	ZSC 7A
ZSC #B	ZSC 5B	ZSC 6B	ZSC 7B
ZSO #A	ZSO 5A	ZSO 6A	ZSO 7A
ZSO #B	ZSO 5B	ZSO 6B	ZSO 7B
MOV #A	MOV 5A	MOV 6A	MOV 7A
MOV #B	MOV 5B	MOV 6B	MOV 7B
PT TK #	PT TK 5	PT TK 6	PT TK 7
LIT TK#	LIT TK5	LIT TK6	LIT TK7
TT TK#	TT TK5	TT TK6	TT TK7
LSH TK#	LSH TK5	LSH TK	LSH TK7
LSH DSTK#	LSH DSTK5	LSH DSTK6	LSH DSTK7

12/20/2023

ENGINEERED PROFESSIONAL ENGINEER 10006PE OREGON JULY 12, 2002 TIMOTHY RENSHAW
EXPIRES: 12/31/2024

no.	date	by	ckd	description
A	12/21/23	TSR	BAW	ISSUED FOR PERMIT

ISSUED FOR PERMIT ONLY

BURNS McDONNELL
9400 WARD PARKWAY
KANSAS CITY, MO 64114
816-333-9400
Burns & McDonnell Engineering Co, Inc.

date	detailed
04/24/2023	S. JESBERG
designed	checked
T. RENSHAW	B. WINTER

PDX FUEL COMPANY L.L.C

PORTLAND INTERNATIONAL AIRPORT
5000 NE MARINE DR.
PORTLAND, OREGON 97218

PDX FACILITY IMPROVEMENTS
CONTROL SYSTEM IO - RISER DIAGRAM - STORAGE - FINAL

project	contract
153929	

drawing **EI653** rev. **A**

file 153929EI653.dwg

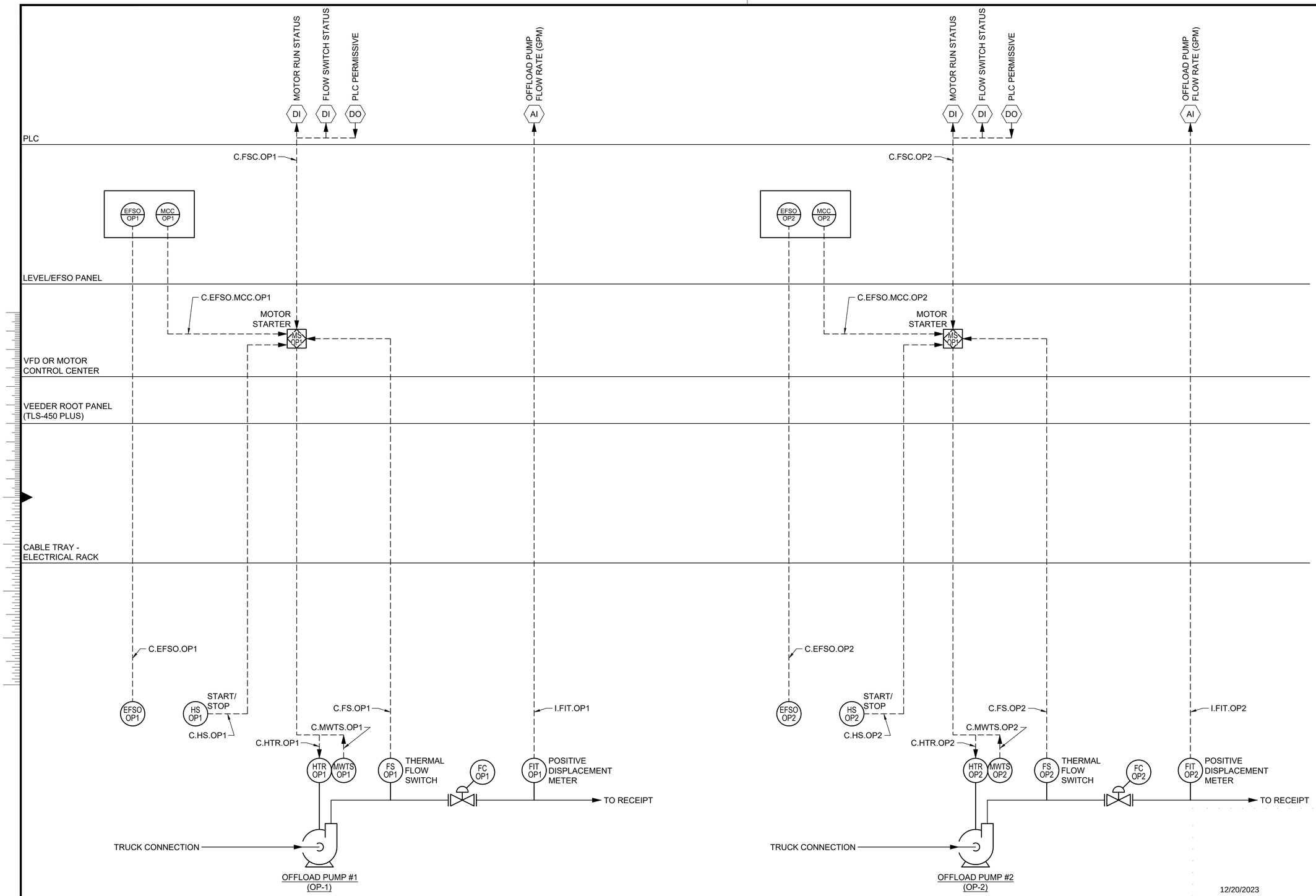

no.	date	by	ckd	description
A	12/21/23	TSR	BAW	ISSUED FOR PERMIT

ISSUED FOR PERMIT ONLY

BURNS McDONNELL
9400 WARD PARKWAY
KANSAS CITY, MO 64114
816-333-9400
Burns & McDonnell Engineering Co, Inc.

date	detailed
04/24/2023	S. JESBERG
designed	checked
T. RENSHAW	B. WINTER

PDX FUEL COMPANY L.L.C

PORTLAND INTERNATIONAL AIRPORT
5000 NE MARINE DR.
PORTLAND, OREGON 97218

PDX FACILITY IMPROVEMENTS
CONTROL SYSTEM IO - RISER DIAGRAM - OFFLOAD

project	contract
153929	

drawing	rev.
EI654	A

file 153929EI654.dwg

12/20/2023

REGISTERED PROFESSIONAL ENGINEER 100084PE OREGON JULY 12, 2021 TIMOTHY RENSHAW
EXPIRES: 12/31/2024

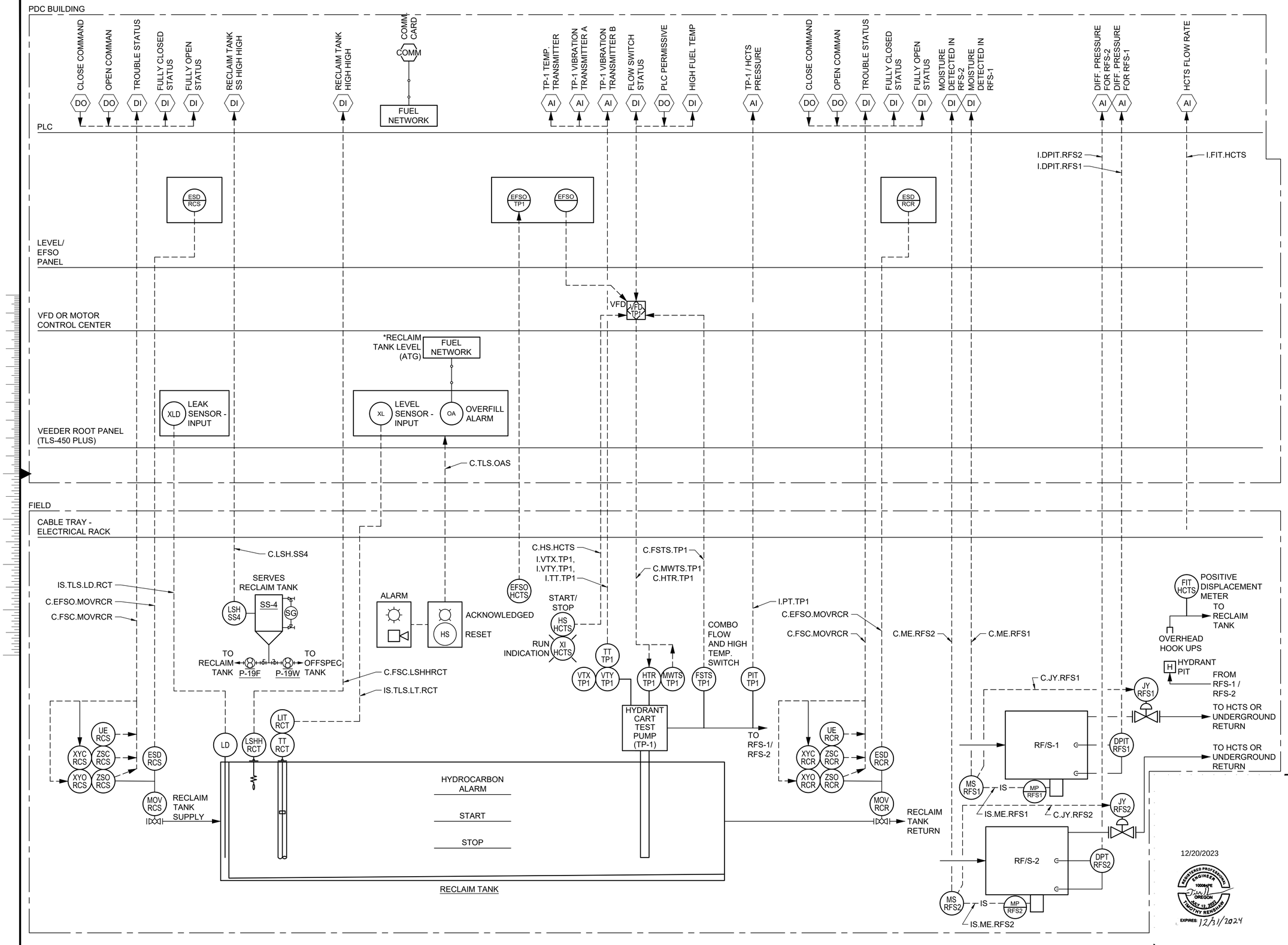

no.	date	by	ckd	description
A	12/21/23	TSR	BAW	ISSUED FOR PERMIT

ISSUED FOR PERMIT ONLY

BURNS McDONNELL
9400 WARD PARKWAY
KANSAS CITY, MO 64114
816-333-9400
Burns & McDonnell Engineering Co, Inc.

date	detailed
04/24/2023	S. JESBERG
designed	checked
T. RENSHAW	B. WINTER

PDX FUEL COMPANY L.L.C

PORTLAND INTERNATIONAL AIRPORT
5000 NE MARINE DR.
PORTLAND, OREGON 97218

PDX FACILITY IMPROVEMENTS
CONTROL SYSTEM IO - RISER DIAGRAM - HCTS

project	contract
153929	

drawing **EI655** rev. **A**

file 153929EI655.dwg

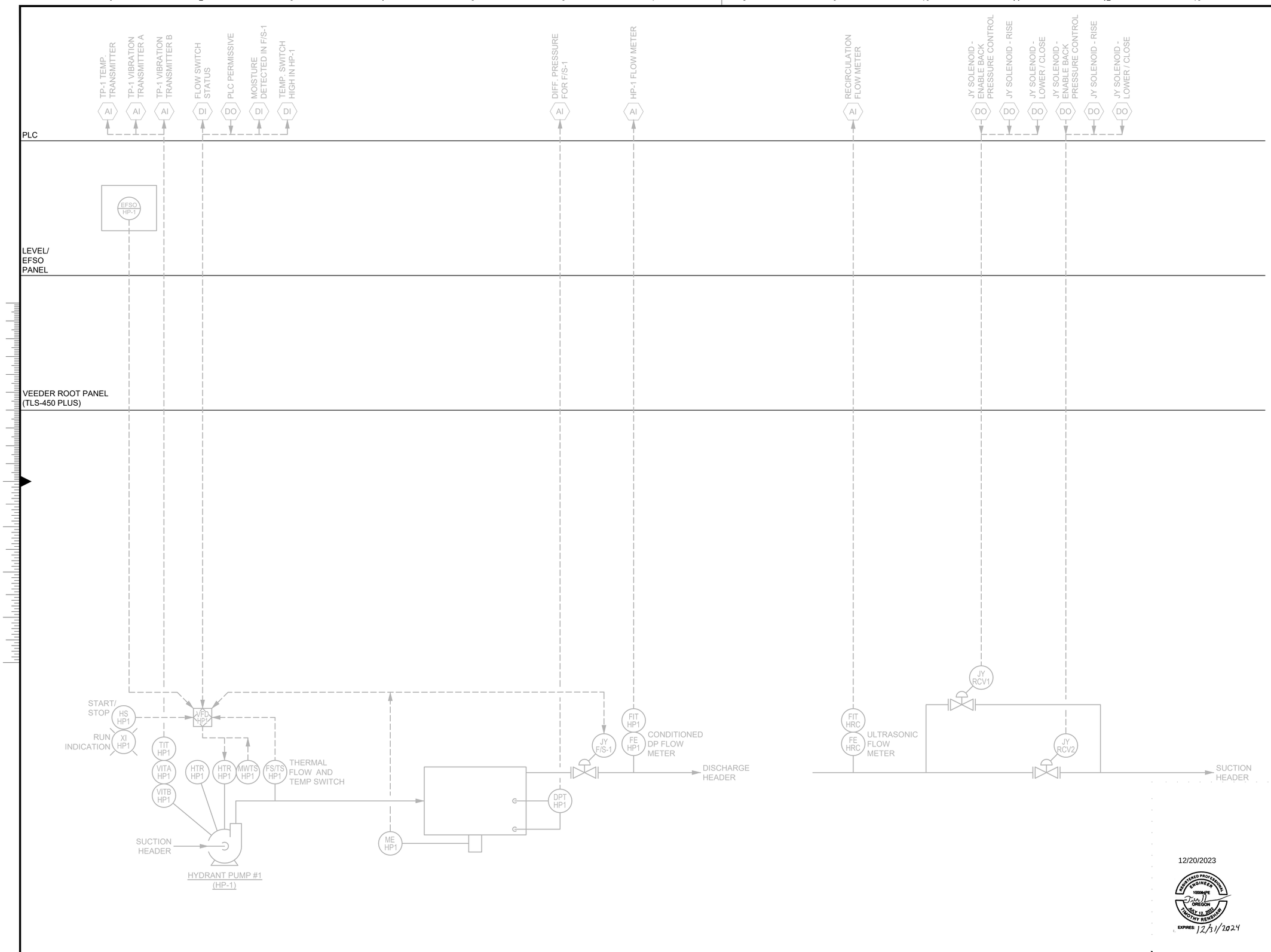

no.	date	by	ckd	description
A	12/21/23	TSR	BAW	ISSUED FOR PERMIT

ISSUED FOR PERMIT ONLY

BURNS McDONNELL
9400 WARD PARKWAY
KANSAS CITY, MO 64114
816-333-9400
Burns & McDonnell Engineering Co, Inc.

date	detailed
04/24/2023	S. JESBERG
designed	checked
T. RENSHAW	B. WINTER

PDX FUEL COMPANY L.L.C

PORTLAND INTERNATIONAL AIRPORT
5000 NE MARINE DR.
PORTLAND, OREGON 97218

PDX FACILITY IMPROVEMENTS
CONTROL SYSTEM IO - RISER DIAGRAM - PUMP PAD & RECIRC

project	contract
153929	

drawing **EI656** rev. **A**

file 153929EI656.dwg

12/20/2023

REGISTERED PROFESSIONAL ENGINEER 100084PE OREGON JULY 12, 2022 TIMOTHY RENSHAW
EXPIRES: 12/31/2024

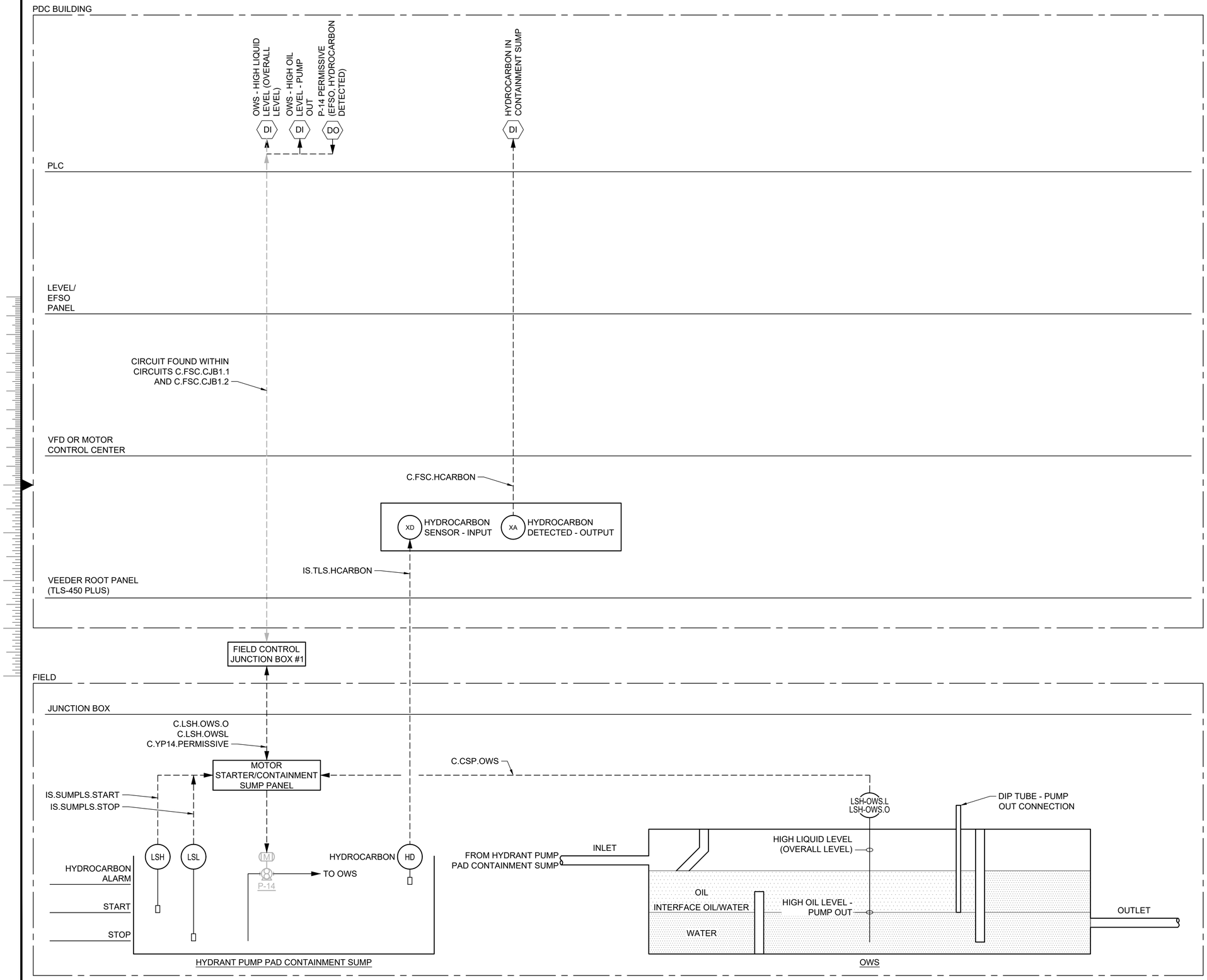

no.	date	by	ckd	description
A	12/21/23	TSR	BAW	ISSUED FOR PERMIT

ISSUED FOR PERMIT ONLY

BURNS McDONNELL
9400 WARD PARKWAY
KANSAS CITY, MO 64114
816-333-9400
Burns & McDonnell Engineering Co, Inc.

date	detailed
04/24/2023	S. JESBERG
designed	checked
T. RENSHAW	B. WINTER

PDX FUEL COMPANY L.L.C

PORTLAND INTERNATIONAL AIRPORT
5000 NE MARINE DR.
PORTLAND, OREGON 97218

PDX FACILITY IMPROVEMENTS

CONTROL SYSTEM IO - RISER DIAGRAM - PUMP PAD & CONTAINMENT SUMP

project	contract
153929	

drawing	rev.
EI657	A

file 153929EI657.dwg

12/20/2023

REGISTERED PROFESSIONAL ENGINEER 10006PE OREGON JULY 12, 2022 TIMOTHY RENSHAW
EXPIRES: 12/31/2024

PANELBOARD NAME: LP-1
PANELBOARD TYPE: MAIN CIRCUIT BREAKER
PANEL LOCATION: PDC
SUPPLIED FROM: MCC-1

65,000 RMS SYMMETRICAL A.I.C.
SURFACE MOUNTED, NEMA 1 ENCLOSURE
208Y/120 VOLTS, 3 PHASE, 4 WIRE, 60 Hz

110 AMP TRIP MAIN BREAKER
200 AMP MAINS

CKT NO.	TRIP AMPS	NO. POLES	WIRE / GND / COND	LOAD SERVED	LOAD VA	Ø	LOAD VA	LOAD SERVED	WIRE / GND / COND	NO. POLES	TRIP AMPS	CKT NO.
1	20	1	2#12 , #12 GND, 3/4" C	PDC INTERIOR LIGHTING	240	A	240	PDC INTERIOR/EXTERIOR RECEPT.	2#12 , #12 GND, 3/4" C	1	20	2
3	20	1	2#12 , #12 GND, 3/4" C	PDC EXTERIORLIGHTING (VIA CONTACTOR)	240	B	240	PDC INTERIOR/EXTERIOR RECEPT.	2#12 , #12 GND, 3/4" C	1	20	4
5	20	1	2#12 , #12 GND, 3/4" C	LIGHTING CONTACTOR	50	C		**SPARE**		2	20	6
7	20	2	2#10 , #10 GND, 3/4" C	**CANOPY LIGHTING (208V) (VIA CONTACTOR)**	510	A						
					510	B		**SPARE**		2	20	10
11	**20**	1	2#12 , #12 GND, 3/4" C	**VEEDER ROOT - OVERFILL ALARM SWITCH**	120	C						
13	20	1		**SPARE**		A	10000	KINDER MORGAN TRANSFORMER (208V-120/240)	2#1 , #6 GND, 3/4" C	2	125	14
15	20	1		SPARE		B	10000					
17	20	1		SPARE		C						
19	**20**	1	2#10 , #10 GND, 3/4" C	**TANK 4 STAIR LIGHTING (FUTURE)**	335	A	879	TANK 5 & 7 AREA LIGHTS (208V) (VIA CONTACTOR)	2#10 , #10 GND, 3/4" C	2	20	20
21	**20**	1	2#10 , #10 GND, 3/4" C	**TANK 5 STAIR LIGHTING (VIA CONTACTOR)**	335	B	879					
23	**20**	1	2#10 , #10 GND, 3/4" C	**TANK 6 STAIR LIGHTING (VIA CONTACTOR)**	335	C	879	TANK 4 & 6 AREA LIGHTS (208V) (VIA CONTACTOR)	2#10 , #10 GND, 3/4" C	2	20	24
25	**20**	1	2#10 , #10 GND, 3/4" C	**TANK 7 STAIR LIGHTING (VIA CONTACTOR)**	335	A	879					
27	**20**	1		**SPARE**		B		**SPARE**		1	**20**	28
29	**20**	1		**SPARE**		C	100	**TANK 4 OBSTRUCTION LIGHT (FUTURE)**	2#12 , #12 GND, 3/4" C	1	15	30
31		1		SPACE		A	100	**TANK 5 OBSTRUCTION LIGHT**	2#12 , #12 GND, 3/4" C	1	15	32
33		1		SPACE		B	100	**TANK 6 OBSTRUCTION LIGHT**	2#12 , #12 GND, 3/4" C	1	15	34
35		1		SPACE		C	100	**TANK 7 OBSTRUCTION LIGHT**	2#12 , #12 GND, 3/4" C	1	15	36
37		1		SPACE		A		SPACE				
39		1		SPACE		B		SPACE				
41		1		SPACE		C		SPACE				

TOTAL CONNECTED LOAD = 27.4 kVA X 64% DEMAND FACTOR = 17.4 kVA ESTIMATED DEMAND LOAD
PHASE BALANCE (KVA) - A: 13.5 , B: 12.3 , C: 1.6 DESIGN LOAD = 48 AMPERES, TOTAL LOAD WITH EXPANSION = 72 AMPERES

NOTES:
1. PROVIDE SURGE PROTECTION DEVICE (SPD).

NOTES:

1. SEE SHEET E-001 FOR GENERAL NOTES, LEGEND AND ABBREVIATIONS.

KEYED NOTES:

1. BREAKER WITHIN ENCLOSURE, LOCATED FOLLOWING TAP RULE. ENCLOSURE TO BE LOCKABLE AND KM TO BE PROVIDED KEY.
2. DEMOLISH AND REMOVE ONCE NEW OPERATIONS BUILDING IS COMMISSIONED.
3. DEMOLISH AND REMOVE ONCE TANKS 5, 6 AND 7 ARE COMMISSIONED.
4. DEMOLISH AND REMOVE ONCE NEW FIRE PROTECTIONS IS COMMISSIONED AT SITE.
5. CONFIRM THAT BREAKER IS 100A OR LESS

PANELBOARD NAME: PNL-5
PANELBOARD TYPE: MAIN CIRCUIT BREAKER
PANEL LOCATION: PDC
SUPPLIED FROM: MCC-1

65,000 RMS SYMMETRICAL A.I.C.
SURFACE MOUNTED, NEMA 1 ENCLOSURE
480 VOLTS, 3 PHASE, 3 WIRE, 60 Hz

200 AMP TRIP MAIN BREAKER
200 AMP MAINS

CKT NO.	TRIP AMPS	NO. POLES	WIRE / GND / COND	LOAD SERVED	LOAD VA	Ø	LOAD VA	LOAD SERVED	WIRE / GND / COND	NO. POLES	TRIP AMPS	CKT NO.
1	20	3	3#12 , #12 GND, 3/4" C	(2) MOV-1A 8" TANK 1 INLET	190	A	440	MOV-1B 12" TANK 1 OUTLET (2)	3#12 , #12 GND, 3/4" C	3	20	2
					190	B	440					
					190	C	440					
7	20	3	3#12 , #12 GND, 3/4" C	(2) MOV-2A 8" TANK 1 INLET	190	A	440	MOV-2B 12" TANK 1 OUTLET (2)	3#12 , #12 GND, 3/4" C	3	20	8
					190	B	440					
					190		440					
13	20	3	3#12 , #12 GND, 3/4" C	(2) MOV-3A 8" TANK 1 INLET	190	A	500	MOV-3B 16" TANK 1 OUTLET (2)	3#12 , #12 GND, 3/4" C	3	20	14
					190	B	500					
					190	C	500					
19	20	3	3#12 , #12 GND, 3/4" C	**RECLAIM SUPPLY AND RETURN (MOV-RCS & MOV-RCR)**	1280	A		**SPARE**		3	20	20
					1280	B						
					1280	C						
25	20	3		**SPARE**		A	8500	**CONSTRUCTION TRAILER POWER**	3#4 , #4 GND, 1" C	3	40	26
						B	8500					
						C	8500					
31	15	3	3#12 , #12 GND, 3/4" C	**TANK 4 MOV - INLET & OUTLET (FUTURE)**	1280	A	1280	**TANK 5 MOV - INLET & OUTLET**	3#12 , #12 GND, 3/4" C	3	15	32
					1280	B	1280					
					1280	C	1280					
37	15	3	3#12 , #12 GND, 3/4" C	**TANK 6 MOV - INLET & OUTLET**	1280	A	1280	**TANK 7 MOV - INLET & OUTLET**	3#12 , #12 GND, 3/4" C	3	15	38
					1280	B	1280					
					1280	C	1280					

TOTAL CONNECTED LOAD = 49.9 kVA X 60% DEMAND FACTOR = 30 kVA ESTIMATED DEMAND LOAD
PHASE BALANCE (KVA) - A: 16.9 , B: 16.9 , C: 16.2 DESIGN LOAD = 36 AMPERES, TOTAL LOAD WITH EXPANSION = 54 AMPERES

NOTES:
1. PROVIDE SURGE PROTECTION DEVICE (SPD).

PANELBOARD NAME: LP-1 (3)
PANELBOARD TYPE: MAIN CIRCUIT BREAKER
PANEL LOCATION: EXISTING MCC-1 RM. (TO BE DEMOLISHED)
SUPPLIED FROM: P-1

65,000 RMS SYMMETRICAL A.I.C.
SURFACE MOUNTED, NEMA 1 ENCLOSURE
208Y/120 VOLTS, 3 PHASE, 4 WIRE, 60 Hz

(5) 110 AMP TRIP MAIN BREAKER
200 AMP MAINS

CKT NO.	TRIP AMPS	NO. POLES	WIRE / GND / COND	LOAD SERVED	LOAD VA	Ø	LOAD VA	LOAD SERVED	WIRE / GND / COND	NO. POLES	TRIP AMPS	CKT NO.
1	20	1		CONTROL PANEL		A		POLE LIGHT SE TRIPLE HEAD		1	20	2
3	20	1		RECEPTACLES		B		EXTERIOR LIGHTING CONTACTOR		1	20	4
5	20	1		ROOM LIGHTS		C						
7	20	1		CATHODIC		A		SPARE		1	20	6
9	30	3		AIR COMPRESSOR		B		CATHODIC T3A		1	20	8
						C		CATHODIC T2A		1	20	10
						A		CATHODIC T1A		1	20	12
15	30	1		SPARE		B		SPARE		1	20	14
17	30	1		SPARE		C		SPARE		1	15	16
19	20	1		TEST STAND RECEPTACLES & EXTERIOR LIGHTS		A		SPACE				

TOTAL CONNECTED LOAD = 0 kVA X 0% DEMAND FACTOR = 0 kVA ESTIMATED DEMAND LOAD
PHASE BALANCE (KVA) - A: 0 , B: 0 , C: 0 DESIGN LOAD = 0 AMPERES, TOTAL LOAD WITH EXPANSION = 0 AMPERES

NOTES:
1. PROVIDE SURGE PROTECTION DEVICE (SPD).

PANELBOARD NAME: PNL-6
PANELBOARD TYPE: MAIN CIRCUIT BREAKER
PANEL LOCATION: PDC
SUPPLIED FROM: MCC-1

65,000 RMS SYMMETRICAL A.I.C.
SURFACE MOUNTED, NEMA 1 ENCLOSURE
208Y/120 VOLTS, 3 PHASE, 4 WIRE, 60 Hz

110 AMP TRIP MAIN BREAKER
200 AMP MAINS

CKT NO.	TRIP AMPS	NO. POLES	WIRE / GND / COND	LOAD SERVED	LOAD VA	Ø	LOAD VA	LOAD SERVED	WIRE / GND / COND	NO. POLES	TRIP AMPS	CKT NO.
1	20	3		**SPARE**		A		SPARE		3	20	2
						B						
						C						
7	20	1	2#12 , #12 GND, 3/4" C	UPS-EFSO/PLC PANEL	1500	A	2000	AIR COMPRESSOR (RELOCATED)	3#10 , #10 GND, 3/4" C	3	35	8
9	20	1		SPARE		B	2000					
11	20	1	2#12 , #12 GND, 3/4" C	ALARM/HORN	1500	C	2000					
13	20	1		SPARE		A	8050	GEP-1 GENERATOR ELECTRICAL PANEL (1)	3#2 , #8 GND, 3/4" C	2	100	14
15	20	1		SPARE		B	8050					
17	20	1		SPARE		C		SPARE		1	20	18
19	15	3	3#12 , #12 GND, 3/4" C	RESERVED	600	A	600	RESERVED	3#12 , #12 GND, 3/4" C	3	15	20
					600	B	600					
					600	C	600					
25	15	3	3#12 , #12 GND, 3/4" C	RESERVED	600	A	795	**TANK 4 (FUTURE) SUMP SEPARATOR MOTORS**	2#6 , #6 GND, 3/4" C	2	15	26
					600	B	795					
					600	C	795	**TANK 5 SUMP SEPARATOR MOTORS**	2#6 , #6 GND, 3/4" C	2	15	30
31	15	2	2#6 , #6 GND, 3/4" C	**TANK 6 SUMP SEPARATOR MOTORS**	795	A	795					
					795	B	795	**SS-4 (PUMP #19F & #19W) LOCATED AT RECLAIM TANK, 3/4 HP**	2#8 , #8 GND, 3/4" C	2	15	34
35	15	2	2#6 , #6 GND, 3/4" C	**TANK 7 SUMP SEPARATOR MOTORS**	795	C	795					
					795	A		SPARE		1	20	38
39	20	1		SPARE		B		SPARE		1	20	40
41	20	1		SPARE		C		SPARE		1	20	42

TOTAL CONNECTED LOAD = 38.5 kVA X 90% DEMAND FACTOR = 34.6 kVA ESTIMATED DEMAND LOAD
PHASE BALANCE (KVA) - A: 16.5 , B: 14.2 , C: 7.7 DESIGN LOAD = 96 AMPERES, TOTAL LOAD WITH EXPANSION = 144 AMPERES

(1)

PANELBOARD NAME: GEP-1
PANELBOARD TYPE: MAIN LUGS ONLY
PANEL LOCATION: PDC
SUPPLIED FROM: PNL-6

65,000 RMS SYMMETRICAL A.I.C.
SURFACE MOUNTED, NEMA 1 ENCLOSURE
208 VOLTS, 1 PHASE, 3 WIRE, 60 Hz

200 AMP MAINS

CKT NO.	TRIP AMPS	NO. POLES	WIRE / GND / COND	LOAD SERVED	LOAD VA	Ø	LOAD VA	LOAD SERVED	WIRE / GND / COND	NO. POLES	TRIP AMPS	CKT NO.
1	20	2	2#12 , #12 GND, 3/4" C	BLOCK HEATER	4500	A	1690	GFCI RECEPTACLE	2#12 , #12 GND, 3/4" C	1	20	2
					4500	B	360	GENERATOR HEATER	2#12 , #12 GND, 3/4" C	1	20	4
5	20	1	2#12 , #12 GND, 3/4" C	ENCLOSURE HEATER	1850	A	240	MOTORIZED AIR INLET LOUVER	2#12 , #12 GND, 3/4" C	1	20	6
					1850	B	60	LED LIGHTS	2#12 , #12 GND, 3/4" C	1	20	8
9	20	1	2#12 , #12 GND, 3/4" C	BATTERY CHARGER	600	A		SPARE		1	15	10
11	20	2	2#12 , #12 GND, 3/4" C	VENTILATION FAN	208	B		SPARE		1	15	12
					208	A		SPARE		1	15	14
15	15	1		SPARE		B		SPARE		1	15	16

TOTAL CONNECTED LOAD = 16.1 kVA X 95% DEMAND FACTOR = 15.2 kVA ESTIMATED DEMAND LOAD
PHASE BALANCE (KVA) - A: 9.1 , B: 7 DESIGN LOAD = 73 AMPERES, TOTAL LOAD WITH EXPANSION = 110 AMPERES

NOTES:
1. PROVIDE SURGE PROTECTION DEVICE (SPD).

12/20/2023

REGISTERED PROFESSIONAL ENGINEER 10006PE OREGON JULY 12, 2022 TIMOTHY RENSHAW
EXPIRES: 12/31/2024

no.	date	by	ckd	description
A	12/21/23	TSR	BAW	ISSUED FOR PERMIT

ISSUED FOR PERMIT ONLY

BURNS McDONNELL
9400 WARD PARKWAY
KANSAS CITY, MO 64114
816-333-9400
Burns & McDonnell Engineering Co, Inc.

date	detailed
04/24/2023	S. JESBERG
designed	checked
T. RENSHAW	B. WINTER

PDX FUEL COMPANY L.L.C

PORTLAND INTERNATIONAL AIRPORT
5000 NE MARINE DR.
PORTLAND, OREGON 97218

PDX FACILITY IMPROVEMENTS
PANELBOARD SCHEDULES - 1

project 153929
contract
drawing **E-701**
rev. **A**

file 153929E-701.dwg

NOTES:

1. SEE SHEET E-001 FOR GENERAL NOTES, LEGEND AND ABBREVIATIONS.

KEYED NOTES:

1. EQUIPMENT NO LONGER EXISTS. BREAKER TO BECOME SPARE ONCE EQUIPMENT IS DEMOLISHED AND REMOVED.
2. EQUIPMENT IS FED FROM NEW SOURCE. BREAKER TO BECOME SPARE.
3. HORSEPOWER BASED ON 1994 RECORD DRAWING, M2 "BULK FUEL STORAGE EXPANSION 94-1014"

PANELBOARD NAME: P1
PANELBOARD TYPE: MAIN CIRCUIT BREAKER
PANEL LOCATION: LAB BUILDING (BACKFLOW ROOM)
SUPPLIED FROM: MCC-1 (MCC-1 LOCATED IN PDC)
65,000 RMS SYMMETRICAL A.I.C.
SURFACE MOUNTED, NEMA 1 ENCLOSURE
480Y/277 VOLTS, 3 PHASE, 4 WIRE, 60 Hz
110 AMP TRIP MAIN BREAKER
200 AMP MAINS

CKT NO.	TRIP AMPS	NO. POLES	WIRE / GND / COND	LOAD SERVED	LOAD VA	Ø	LOAD VA	LOAD SERVED	WIRE / GND / COND	NO. POLES	TRIP AMPS	CKT NO.
1	15	3		(3) SS-3 (PUMP #9F & #8W) LOCATED AT PUMP PAD, 10GPM, 3/4HP	450	A		SPARE		3	15	2
					450	B						
					450	C						
7	20	3		(1) PUMP #10 TANK # 3 WATER		A		PUMP #11 TANK # 3 FUEL (1)		3	20	8
						B						
						C						
13	20	3		(1) PUMP #12 TANK # 1 & 2 WATER		A		PUMP #13 FUEL TANK # 1 & 2 (1)		3	20	14
						B						
						C						
19	20	3		(3) YARD PUMP #14 (LOCATED ON TOP OF SUMP PIT AT PUMP PAD), 40GPM, 1/2HP	310	A		PUMP #15 TEST STND. PUMP (1)		3	20	20
					310	B						
					310	C						
25	20	3		TRANSFORMER T-2 (LOCATED IN UTILITY/BACKFLOW RM), 30kVA	4410	A		TRANSFORMER T-1 (LOCATED OUTSIDE EXISTING OPS. BLDG.) (1)		3	20	26
					4410	B						
					4410	C						
31	**20**	**3**	**3#12 , #12 GND, 1" C**	**LIFT STATION PANEL 16A & 16B**	4150	A		SPARE		3	15	32
					4150	B						
					4150	C						
37		1		**SPACE**		A		SPARE		3	40	38
39		1		**SPACE**		B						
41		1		**SPACE**		C						

TOTAL CONNECTED LOAD = 28 kVA X 89% DEMAND FACTOR = 25 kVA ESTIMATED DEMAND LOAD
PHASE BALANCE (KVA) - A: 9.3 , B: 9.3 , C: 9.3 DESIGN LOAD = 30 AMPERES, TOTAL LOAD WITH EXPANSION = 45 AMPERES

NOTES:
1. PROVIDE SURGE PROTECTION DEVICE (SPD).

PANELBOARD NAME: PANEL 1
PANELBOARD TYPE: MAIN CIRCUIT BREAKER
PANEL LOCATION: MCC
SUPPLIED FROM: MCC BUILDING
65,000 RMS SYMMETRICAL A.I.C.
SURFACE MOUNTED, NEMA 1 ENCLOSURE
480Y/277 VOLTS, 3 PHASE, 4 WIRE, 60 Hz
100 AMP TRIP MAIN BREAKER
200 AMP MAINS

CKT NO.	TRIP AMPS	NO. POLES	WIRE / GND / COND	LOAD SERVED	LOAD VA	Ø	LOAD VA	LOAD SERVED	WIRE / GND / COND	NO. POLES	TRIP AMPS	CKT NO.
1	15	3		TANK 1 BIG VALVE OUT		A		TANK 1 SMALL VALVE IN		3	15	2
						B						
						C						
7	15	3		TANK 2 BIG VALVE OUT		A		TANK 2 SMALL VALVE IN		3	15	8
						B						
						C						
13	15	3		TANK 3 BIG VALVE OUT		A		TANK 3 SMALL VALVE IN		3	15	14
						B						
						C						

TOTAL CONNECTED LOAD = 0 kVA X 0% DEMAND FACTOR = 0 kVA ESTIMATED DEMAND LOAD
PHASE BALANCE (KVA) - A: 0 , B: 0 , C: 0 DESIGN LOAD = 0 AMPERES, TOTAL LOAD WITH EXPANSION = 0 AMPERES

NOTES:
1. PROVIDE SURGE PROTECTION DEVICE (SPD).

PANELBOARD NAME: P2
PANELBOARD TYPE: MAIN CIRCUIT BREAKER
PANEL LOCATION: LAB
SUPPLIED FROM:
65,000 RMS SYMMETRICAL A.I.C.
SURFACE MOUNTED, NEMA 1 ENCLOSURE
208Y/120 VOLTS, 3 PHASE, 4 WIRE, 60 Hz
110 AMP TRIP MAIN BREAKER
200 AMP MAINS

CKT NO.	TRIP AMPS	NO. POLES	WIRE / GND / COND	LOAD SERVED	LOAD VA	Ø	LOAD VA	LOAD SERVED	WIRE / GND / COND	NO. POLES	TRIP AMPS	CKT NO.
1				SPACE		A		SPACE				2
3				SPACE		B		SPACE				4
5				SPACE		C		SPACE				6
7				SPACE		A		SPACE				8
9				SPACE		B		SPACE				10
11				SPACE		C		SPACE				12
13	15	2		SPARE		A		TEST BOOTH		1	20	14
						B		SPARE		1	20	16
17	15	1		LITES		C		SPARE		2	15	18
19	20	2		VALVE ROOM HEATERS		A						
						B		SPARE		1	20	22
23	20	1		RECEPTACLES		C		SPARE		1	20	24
25	20	1		LAB RECEPTACLES		A		T3 SLOP TANK FLOOD LITE/R?		1	20	26
27	20	1		LAB PLUGS		B		T3 TANK LITE/TANK CONTROL		1	20	28
29	20	1		LAB DRAIN PUMP		C		T1-T2 TANK LITE/TANK CONTROL		1	20	30
31	20	1		SPARE		A		WATER HEATER		1	20	32
33	15	2		SPARE		B		SPARE		1	20	34
						C		AC HEATER		2	20	36
37	50	3		P3 FOAM HOUSE PANEL		A						
						B		SPARE		2	30	40
43	100	3		MAIN		C						48
						A						
						B						
						C						

TOTAL CONNECTED LOAD = 0 kVA X 0% DEMAND FACTOR = 0 kVA ESTIMATED DEMAND LOAD
PHASE BALANCE (KVA) - A: 0 , B: 0 , C: 0 DESIGN LOAD = 0 AMPERES, TOTAL LOAD WITH EXPANSION = 0 AMPERES

NOTES:
1. PROVIDE SURGE PROTECTION DEVICE (SPD).

PANELBOARD NAME: PNL-4
PANELBOARD TYPE: MAIN CIRCUIT BREAKER
PANEL LOCATION: OFFICE OPERATIONS BUILDING
SUPPLIED FROM: P1
65,000 RMS SYMMETRICAL A.I.C.
SURFACE MOUNTED, NEMA 1 ENCLOSURE
208Y/120 VOLTS, 3 PHASE, 4 WIRE, 60 Hz
110 AMP TRIP MAIN BREAKER
200 AMP MAINS

CKT NO.	TRIP AMPS	NO. POLES	WIRE / GND / COND	LOAD SERVED	LOAD VA	Ø	LOAD VA	LOAD SERVED	WIRE / GND / COND	NO. POLES	TRIP AMPS	CKT NO.
1	60	3		HVAC		A		WATER HEATER		2	30	2
						B						
						C		LIGHTS		1	20	6
7	20	1		LIGHTS		A		RECEPTS		1	20	8
9	20	1		RECEPTS		B		RECEPTS		1	20	10
11	20	1		RECEPTS		C		RECEPTS		1	20	12
13	20	1		RECEPTS		A		CRAWL SECURITY LITE		1	20	14
15	20	1		RECEPTS		B		SMOKES		1	20	16
17		1		SPACE		C		SPACE		1		18
19		1		SPACE		A		SPACE		1		20
21		1		SPACE		B		SPACE		1		22
23		1		SPACE		C		SPACE		1		24
25		1		SPACE		A		SPACE		1		26
27		1		SPACE		B		SPACE		1		28
29		1		SPACE		C		SPACE		1		30
31		1		SPACE		A		SPACE		1		32
33		1		SPACE		B		SPACE		1		34
35		1		SPACE		C		SPACE		1		36
37		1		SPACE		A		SPACE		1		38
39		1		SPACE		B		SPACE		1		40
41		1		SPACE		C		SPACE		1		42

TOTAL CONNECTED LOAD = 0 kVA X 0% DEMAND FACTOR = 0 kVA ESTIMATED DEMAND LOAD
PHASE BALANCE (KVA) - A: 0 , B: 0 , C: 0 DESIGN LOAD = 0 AMPERES, TOTAL LOAD WITH EXPANSION = 0 AMPERES

NOTES:
1. PROVIDE SURGE PROTECTION DEVICE (SPD).

PANELBOARD NAME: P3
PANELBOARD TYPE: MAIN CIRCUIT BREAKER
PANEL LOCATION: FOAM BUILDING
SUPPLIED FROM: MCC LP-1
65,000 RMS SYMMETRICAL A.I.C.
SURFACE MOUNTED, NEMA 1 ENCLOSURE
208Y/120 VOLTS, 3 PHASE, 4 WIRE, 60 Hz
110 AMP TRIP MAIN BREAKER
200 AMP MAINS

CKT NO.	TRIP AMPS	NO. POLES	WIRE / GND / COND	LOAD SERVED	LOAD VA	Ø	LOAD VA	LOAD SERVED	WIRE / GND / COND	NO. POLES	TRIP AMPS	CKT NO.
1	20			SPACE		A		SPACE				2
3				SPACE		B		SPACE				4
5				SPACE		C		SPACE				6
7	20	1		SPARE		A		RECEPTICAL		1	20	8
9	20	2		HEATER		B		LITE		1	20	10
						C		SPARE		1	20	12
13	50	3		MAIN		A		SPACE		1		14
						B		SPACE		1		16
						C		SPACE		1		18

TOTAL CONNECTED LOAD = 0 kVA X 0% DEMAND FACTOR = 0 kVA ESTIMATED DEMAND LOAD
PHASE BALANCE (KVA) - A: 0 , B: 0 , C: 0 DESIGN LOAD = 0 AMPERES, TOTAL LOAD WITH EXPANSION = 0 AMPERES

NOTES:
1. PROVIDE SURGE PROTECTION DEVICE (SPD).

12/20/2023

REGISTERED PROFESSIONAL ENGINEER 10006PE OREGON JULY 12, 2002 TIMOTHY RENSHAW
EXPIRES: 12/31/2024

no.	date	by	ckd	description
A	12/21/23	TSR	BAW	ISSUED FOR PERMIT

ISSUED FOR PERMIT ONLY

BURNS McDONNELL
9400 WARD PARKWAY
KANSAS CITY, MO 64114
816-333-9400
Burns & McDonnell Engineering Co, Inc.

date	detailed
04/24/2023	S. JESBERG
designed	checked
T. RENSHAW	B. WINTER

PDX FUEL COMPANY L.L.C

PORTLAND INTERNATIONAL AIRPORT
5000 NE MARINE DR.
PORTLAND, OREGON 97218

PDX FACILITY IMPROVEMENTS
PANELBOARD SCHEDULES - 2

project	contract
153929	

drawing **E-702** rev. **A**

file 153929E-702.dwg

NOTES:

1. SEE SHEET E-001 FOR GENERAL NOTES, LEGEND AND ABBREVIATIONS.

KEYED NOTES:

1. GROUND IS RAN WITH EACH SET

FUEL STORAGE POWER CIRCUIT SCHEDULE

DUCTBANK SECTION(S)	PDC STUB UP	CIRCUIT NUMBER	FROM	TO	PURPOSE	VOLTS	CONDUCTORS POWER NUMBER AND SIZE	GROUND (1) NUMBER AND SIZE	TYPI	NOTES
B	B2, B3, B4, B6, B7	P.XFMR.SWGR1	UTILITY TRANSFORMER	SWITCHGEAR SWGR-1	SERVICE ENTRANCE CONDUCTORS	480V	5 SETS OF (4) 600KCMIL		1	
-	-	P.SWGR1.ATS1	SWITCHGEAR SWGR-1	AUTOMATIC TRANSFER SWITCH ATS-1	ATS FEEDER	480V	4 SETS OF (3) 600 KCMIL	1 - #4/0 AWG	1	1600A OVERCURRENT PROTECTION
-	-	P.SWGR1.ATS2	SWITCHGEAR SWGR-1	AUTOMATIC TRANSFER SWITCH ATS-2	ATS FEEDER	480V	4 SETS OF (3) 600 KCMIL	1 - #4/0 AWG	1	1600A OVERCURRENT PROTECTION
C	C2, C3, C4, C5	P.GEN.ATS1	GENERATOR	AUTOMATIC TRANSFER SWITCH ATS-1	ATS FEEDER	480V	4 SETS OF (3) 600 KCMIL	1 - #4/0 AWG	1	1600A OVERCURRENT PROTECTION
C	C8, C9, C10, C11	P.GEN.ATS2	GENERATOR	AUTOMATIC TRANSFER SWITCH ATS-2	ATS FEEDER	480V	4 SETS OF (3) 600 KCMIL	1 - #4/0 AWG	1	1600A OVERCURRENT PROTECTION
-	-	P.ATS1.SWBD1	AUTOMATIC TRANSFER SWITCH ATS-1	SWITCHBOARD SWBD-1	SWITCHBOARD FEEDER	480V	4 SETS OF (3) 600 KCMIL	1 - #4/0 AWG	1	1600A OVERCURRENT PROTECTION
-	-	P.ATS2.SWBD2	AUTOMATIC TRANSFER SWITCH ATS-2	SWITCHBOARD SWBD-2	SWITCHBOARD FEEDER	480V	4 SETS OF (3) 600 KCMIL	1 - #4/0 AWG	1	1600A OVERCURRENT PROTECTION
-	-	P.SWBD1.MCC1	SWITCHBOARD SWBD-1	MOTOR CONTROL CENTER MCC-1	MOTOR CONTROL CENTER FEEDER	480V	2 SETS OF (3) 350KCMIL	1 - #1 AWG	1	600A OVERCURRENT PROTECTION
-	-	P.SWBD1.VFDHP1	SWITCHBOARD SWBD-1	VARIABLE FREQUENCY DRIVE VFD-HP1	VARIABLE FREQUENCY DRIVE BRANCH CIRCUIT	480V	2 SETS OF (3) #4/0 AWG	1 - #3 AWG	3	200HP VFD, NOTE 1
-	-	P.SWBD1.VFDHP3	SWITCHBOARD SWBD-1	VARIABLE FREQUENCY DRIVE VFD-HP3	VARIABLE FREQUENCY DRIVE BRANCH CIRCUIT	480V	2 SETS OF (3) #4/0 AWG	1 - #3 AWG	3	200HP VFD, NOTE 1
-	-	P.SWBD1.VFDHP5	SWITCHBOARD SWBD-1	VARIABLE FREQUENCY DRIVE VFD-HP5	VARIABLE FREQUENCY DRIVE BRANCH CIRCUIT	480V	2 SETS OF (3) #4/0 AWG	1 - #3 AWG	3	200HP VFD, NOTE 1
-	-	P.SWBD2.MCC1	SWITCHBOARD SWBD-2	MOTOR CONTROL CENTER MCC-1	MOTOR CONTROL CENTER FEEDER	480V	2 SETS OF (3) 350KCMIL	1 - #1 AWG	1	600A OVERCURRENT PROTECTION
-	-	P.SWBD2.VFDHP2	SWITCHBOARD SWBD-2	VARIABLE FREQUENCY DRIVE VFD-HP2	VARIABLE FREQUENCY DRIVE BRANCH CIRCUIT	480V	2 SETS OF (3) #4/0 AWG	1 - #3 AWG	3	200HP VFD, NOTE 1
-	-	P.SWBD2.VFDHP4	SWITCHBOARD SWBD-2	VARIABLE FREQUENCY DRIVE VFD-HP4	VARIABLE FREQUENCY DRIVE BRANCH CIRCUIT	480V	2 SETS OF (3) #4/0 AWG	1 - #3 AWG	3	200HP VFD, NOTE 1
-	-	P.SWBD2.VFDHP6	SWITCHBOARD SWBD-2	VARIABLE FREQUENCY DRIVE VFD-HP6	VARIABLE FREQUENCY DRIVE BRANCH CIRCUIT	480V	2 SETS OF (3) #4/0 AWG	1 - #3 AWG	3	200HP VFD, NOTE 1
K5	**K5**	**P.SWBD2.OPS**	**SWITCHBOARD SWBD-2**	**OPERATIONS BUILDING (MAIN FEED)**	**MAIN POWER FEED TO OPERATIONS BUILDING**	**480V**	**1 SETS OF (3) #1 AWG**	**1 - #8 AWG**	**1**	
F11, G3, I3	F11	P.VFD1.HP1	VARIABLE FREQUENCY DRIVE VFD-HP1	HYDRANT PUMP HP-1	PUMP BRANCH CIRCUIT	480V	3/C - 350KCMIL	(3) #2	2	200HP
F12, G4, I4	F12	P.VFD2.HP2	VARIABLE FREQUENCY DRIVE VFD-HP2	HYDRANT PUMP HP-2	PUMP BRANCH CIRCUIT	480V	3/C - 350KCMIL	(3) #2	2	200HP
F13, G5, I5	F13	P.VFD3.HP3	VARIABLE FREQUENCY DRIVE VFD-HP3	HYDRANT PUMP HP-3	PUMP BRANCH CIRCUIT	480V	3/C - 350KCMIL	(3) #2	2	200HP
F14, G6, I6	F14	P.VFD4.HP4	VARIABLE FREQUENCY DRIVE VFD-HP4	HYDRANT PUMP HP-4	PUMP BRANCH CIRCUIT	480V	3/C - 350KCMIL	(3) #2	2	200HP
F23, G15, I10	F23	P.VFD5.HP5	VARIABLE FREQUENCY DRIVE VFD-HP5	HYDRANT PUMP HP-5	PUMP BRANCH CIRCUIT	480V	3/C - 350KCMIL	(3) #2	2	200HP
-	-	P.MCC1.VFDTP1	MOTOR CONTROL CENTER MCC-1	VARIABLE FREQUENCY DRIVE VFD-TP1	VARIABLE FREQUENCY DRIVE BRANCH CIRCUIT	480V	3/C - 350KCMIL	1 - #3 AWG	1	100HP VFD, NOTE 1
Z37, T30, Q23, R23	**Z37**	**P.VFDTP1.TP1**	**VARIABLE FREQUENCY DRIVE VFD-TP1**	**HYDRANT CART TEST STAND PUMP, TP-1**	**HCTS PUMP BRANCH CIRCUIT**	**480V**	**3/C - #2/0 AWG**	**1 - #6 AWG**	**2**	**100HP**
Z15, T7, L4	**Z15**	**P.MCC1.OP1**	**MOTOR CONTROL CENTER MCC-1**	**OFFLOAD PUMP #1, OP-1**	**OFFLOAD PUMP, OP-1 BRANCH CIRCUIT**	**480V**	**3/C - #4 AWG**	**1 - #8 AWG**	**3**	**40HP**
Z26, T19, Q5, R5	**Z26**	**P.MCC1.OP2**	**MOTOR CONTROL CENTER MCC-1**	**OFFLOAD PUMP #2, OP-2**	**OFFLOAD PUMP, OP-2 BRANCH CIRCUIT**	**480V**	**3/C - #4 AWG**	**1 - #8 AWG**	**3**	**40HP**
F22, G14, I9	F22	P.MCC1.TP2	MOTOR CONTROL CENTER MCC-1	TRANSFER PUMP, TP-2	TRANSFER PUMP BRANCH CIRCUIT	480V	3/C - #6 AWG	1 - #8 AWG	3	30HP
-	-	P.MCC1.HVAC1	MOTOR CONTROL CENTER MCC-1	EXTERIOR HVAC UNIT 1, HVAC-1	EXTERIOR HVAC UNIT 1, HVAC-1 BRANCH CIRCUIT	480V	3/C - #1 AWG	1 - #6 AWG	3	110A BREAKER, QUANTITY AND SIZE BY VENDOR
-	-	P.MCC1.HVAC2	MOTOR CONTROL CENTER MCC-1	EXTERIOR HVAC UNIT 2, HVAC-2	EXTERIOR HVAC UNIT 2, HVAC-2 BRANCH CIRCUIT	480V	3/C - #1 AWG	1 - #6 AWG	3	110A BREAKER, QUANTITY AND SIZE BY VENDOR
-	-	P.MCC1.PNL5	MOTOR CONTROL CENTER MCC-1	480V PANELBOARD, PNL-5	480V PANELBOARD, PNL-5 BRANCH CIRCUIT	480V	3/C - #1 AWG	1 - #8 AWG	3	100A
F3, E1	F3	P.MCC1.PP1	MOTOR CONTROL CENTER MCC-1	480V PANELBOARD, PP1	480V PANELBOARD, PP1 BRANCH CIRCUIT	480V	3/C - #1 AWG	1 - #8 AWG	3	100A
-	-	P.MCC1.TR6	MOTOR CONTROL CENTER MCC-1	TRANSFORMER TR-6	TRANSFORMER TR-6 BRANCH CIRCUIT	480V	3/C - #6 AWG	1 - #10 AWG	3	30KVA
-	-	P.TR6.PNL6	TRANSFORMER TR-6	120/208V PANELBOARD, PNL-6	120/208V PANELBOARD, PNL-6 BRANCH CIRCUIT	208V	4/C - #1 AWG	1 - #6 AWG	3	30KVA
-	-	P.MCC1.TR7	MOTOR CONTROL CENTER MCC-1	TRANSFORMER TR-7	TRANSFORMER TR-7 BRANCH CIRCUIT	480V	3/C - #6 AWG	1 - #10 AWG	3	30KVA
-	-	P.TR7.LP1	TRANSFORMER TR-7	120/208V LIGHTING PANELBOARD, LP-1	120/208V PANELBOARD, LP-1 BRANCH CIRCUIT	208V	4/C - #1 AWG	1 - #6 AWG	3	30KVA

NOTES:
1. APPROVED EQUAL DLO CABLE (RHH/RHW) IS ACCEPTABLE FOR POWER CIRCUITS INTERIOR TO ELECTRICAL ENCLOSURE. CABLE SHALL MEET MINIMUM REQUIREMENTS AS INDICATED IN CABLE TYPE 1 AND 3.
2. SIZING BASED ON ANTICIPATED INPUT RATING OF THE VFD. CONDUCTOR SIZES MAY BE REDUCED BASED ON NAMEPLATE DATA AFTER SUPPLIED BY SUBCONTRACTOR.

CABLE TYPE	DESCRIPTION	TYPE
1	SINGLE CONDUCTOR, COPPER STRANDED WITH 600V RATING, UL LISTED, OIL RESISTANT, TYPE XHHW-2	480V POWER CABLE
2	MULTI CONDUCTOR, COPPER STRANDED WITH 1000V RATING, UL LISTED, XHHW-2, PVC OVERALL JACKET, COPPER TAPE SHIELD (100% COVERAGE), THREE SYMMETRICAL GROUND WIRES, OIL RESISTANT, UL LISTED	480V VFD CABLE
3	MULTI CONDUCTOR, COPPER STRANDED WITH 600V RATING, UL LISTED, TRAY CABLE, TC-ER, XHHW-2, PVC OVERALL JACKET, SUNLIGHT RESISTANT PER UL 1277, LISTED FOR USE IN CLASS I DIVISION 2 AREAS	480V POWER CABLE - MULTICONDUCTOR

12/20/2023

REGISTERED PROFESSIONAL ENGINEER 100064PE OREGON JULY 12, 2022 TIMOTHY RENSHAW

EXPIRES: 12/31/2024

no.	date	by	ckd	description
A	12/21/23	TSR	BAW	ISSUED FOR PERMIT

ISSUED FOR PERMIT ONLY

BURNS McDONNELL
9400 WARD PARKWAY
KANSAS CITY, MO 64114
816-333-9400
Burns & McDonnell Engineering Co, Inc.

date 04/24/2023 | detailed S. JESBERG
designed T. RENSHAW | checked B. WINTER

PDX FUEL COMPANY L.L.C

PORTLAND INTERNATIONAL AIRPORT
5000 NE MARINE DR.
PORTLAND, OREGON 97218

PDX FACILITY IMPROVEMENTS
CABLE SCHEDULE - 1

project 153929 | contract
drawing **E-703** | rev. **A**

file 153929E-703.dwg

CONTROL CIRCUIT SCHEDULE

DUCTBANK SECTION(S)	PDC STUB UP	CONTROL CIRCUIT SCHEDULE	FROM	TO	PURPOSE	SIGNAL	PLC I/O DI	PLC I/O DO	PLC I/O AI	PLC I/O AO	PLC I/O PULSE	PLC I/O COMM	CONDUCTORS QUANTITY AND SIZE	CONDUCTORS TYPE	NOTES
VEEDER ROOT PANEL															
-	-	C.FSC.HCARBON	TLS PANEL	FUEL SYSTEM CONTROL PNL (PLC-1)	HYDROCARBON ALARM TO PLC-1	120VAC	1	-	-	-	-	-	3/C #14	B	
Z29, T22, Q24, R24	Z29	IS.TLS.LT.RCT	TLS PANEL	RECLAIM TANK AUTOMATIC TANK GAUGE	ATG SYSTEM FOR RECLAIM TANK	I.S.	-	-	-	-	-	-	(1) TSP #18	G	SEE VENDOR CATALOG; BELDEN 88760
Z29, T22, Q24, R24	Z29	IS.TLS.LD.RCT	TLS PANEL	RECLAIM TANK LEAK SENSOR	LEAK SENSOR FOR RECLAIM TANK	I.S.	-	-	-	-	-	-	(1) TSP #18	G	SEE VENDOR CATALOG; BELDEN 88760
Z20, T20, Q21, R21	Z20	C.TLS.OAS	TLS PANEL	OVERFILL ALARM SWITCH	OVERFILL ALARM SWITCH TO TLS RELAY CARD	120VAC	-	-	-	-	-	-	3/C #14	B	
F27, G19, J6	F27	IS.TLS.HCARBON	TLS PANEL	HYDROCARBON SENSOR	SENSE HYDROCARBON WITHIN CONTAINMENT SUMP	I.S.	-	-	-	-	-	-	(1) TSP #18	G	SEE VENDOR CATALOG; BELDEN 88760
CONTAINMENT SUMP PANEL															
F16, G8, J2	NOTE 2	C.LSH.OWS.O	CONTAINMENT SUMP PANEL	FUEL SYSTEM CONTROL PNL (PLC-1)	OWS LEVEL SWITCH HIGH - OIL	120VAC	1	-	-	-	-	-	(3) #14	A	
F16, G8, J2	NOTE 2	C.LSH.OWS.L	CONTAINMENT SUMP PANEL	FUEL SYSTEM CONTROL PNL (PLC-1)	OWS LEVEL SWITCH HIGH - LIQUID	120VAC	1	-	-	-	-	-	(3) #14	A	
F16, G8, J2	NOTE 2	C.YP14.PERMISSIVE	CONTAINMENT SUMP PANEL	FUEL SYSTEM CONTROL PNL (PLC-1)	YARD PUMP - PLC RUN PERMISSIVE	120VAC	-	1	-	-	-	-	(3) #14	A	
-	-	C.CSP.OWS	CONTAINMENT SUMP PANEL	OWS LEVEL SWITCHES	OWS HIGH OIL AND LIQUID - LEVEL SWITCHES	120VAC	-	-	-	-	-	-	(5) #14	A	
-	-	IS.SUMPLS.START	CONTAINMENT SUMP PANEL	SUMP LEVEL SWITCH	SUMP HIGH LEVEL SWITCH - START	I.S.	-	-	-	-	-	-	VENDOR FURNISHED	VENDOR	CABLE SUPPLIED WITH FLOAT
-	-	IS.SUMPLS.STOP	CONTAINMENT SUMP PANEL	SUMP LEVEL SWITCH	SUMP LOW LEVEL SWITCH - STOP	I.S.	-	-	-	-	-	-	VENDOR FURNISHED	VENDOR	CABLE SUPPLIED WITH FLOAT
SUMP SEPARATOR SS-3															
F16, G8, J2	NOTE 2	C.LSH.SS3	SUMP SEPARATOR SS-3	FUEL SYSTEM CONTROL PNL (PLC-1)	LEVEL SWITCH HIGH - SS3 (LSH-SS3)	120VAC	1	-	-	-	-	-	3/C #14	B	
SUMP SEPARATOR SS-4															
Z9, T4, Q14, R14	Z9	C.LSH.SS4	SUMP SEPARATOR SS-4	FUEL SYSTEM CONTROL PNL (PLC-1)	LEVEL SWITCH HIGH - SS3 (LSH-SS4)	120VAC	1	-	-	-	-	-	3/C #14	B	
OFFLOAD PUMPS															
OFFLOAD PUMP #1															
-	-	C.EFSO.MCC.OP1	MOTOR CONTROL CENTER (MCC-1)	EFSO PANEL	EFSO INTERLOCK, OP-1	120VAC	-	-	-	-	-	-	2/C #14	B	
Z2, T5, L2	Z2	P.FIT.OP1	FUEL SYSTEM CONTROL PNL (PLC-1)	FLOW METER (FE-OP1)	METER POWER	24VDC	-	-	-	-	-	-	3/C #14	B	PD METER - POWER
Z2, T5, L2	Z2	I.FIT.OP1	FUEL SYSTEM CONTROL PNL (PLC-1)	FLOW METER (FE-OP1)	4-20MA SIGNAL	4-20mA	-	-	1	-	-	-	(1) TSP #16	E	PD METER - SIGNAL
Z15, T7, L4	Z15	C.FS.OP1	MOTOR CONTROL CENTER (MCC-1)	FLOW SWITCH (FS-OP1)	CONTROL SWITCH FS-OP1 POWER/STATUS	120VAC	-	-	-	-	-	-	5/C #14	B	
Z15, T7, L4	Z15	C.HS.OP1	MOTOR CONTROL CENTER (MCC-1)	HAND STATION (HS-OP1)	START STOP CONTROL (IN HAND)	120VAC	-	-	-	-	-	-	5/C #14	B	
Z15, T7, L4	Z15	C.MWTS.OP1	MOTOR CONTROL CENTER (MCC-1)	MOTOR WINDING TEMPERATURE SWITCH, OP-1	MOTOR WINDING TEMPERATURE SWITCH, OP-1	120VAC	-	-	-	-	-	-	3/C #14	B	
Z15, T7, L4	Z15	C.HTR.OP1	MOTOR CONTROL CENTER (MCC-1)	MOTOR HEATER, OP-1	MOTOR HEATER, OP-1	120VAC	-	-	-	-	-	-	3/C #14	B	
-	-	C.FSC.OP1	MOTOR CONTROL CENTER (MCC-1)	FUEL SYSTEM CONTROL PNL (PLC-1)	OP-1 PLC CONTROL/ RUN FEEDBACK / FLOW STATUS	120VAC	2	1	-	-	-	-	9/C #14	B	
OFFLOAD PUMP #2															
-	-	C.EFSO.MCC.OP2	MOTOR CONTROL CENTER (MCC-1)	EFSO PANEL	EFSO INTERLOCK, OP-2	120VAC	-	-	-	-	-	-	2/C #14	B	
Z8, T3, Q13, R13	Z8	P.FIT.OP2	FUEL SYSTEM CONTROL PNL (PLC-1)	FLOW METER (FE-OP2)	METER POWER	24VDC	-	-	-	-	-	-	3/C #14	B	PD METER - POWER
Z8, T3, Q13, R13	Z8	I.FIT.OP2	FUEL SYSTEM CONTROL PNL (PLC-1)	FLOW METER (FE-OP2)	4-20MA SIGNAL	4-20mA	-	-	1	-	-	-	(1) TSP #16	E	PD METER - SIGNAL
Z26, T19, Q5, R5	Z26	C.FS.OP2	MOTOR CONTROL CENTER (MCC-1)	FLOW SWITCH (FS-OP2)	CONTROL SWITCH FS-OP2 POWER/STATUS	120VAC	-	-	-	-	-	-	5/C #14	B	
Z26, T19, Q5, R5	Z26	C.HS.OP2	MOTOR CONTROL CENTER (MCC-1)	HAND STATION (HS-OP2)	START STOP CONTROL (IN HAND)	120VAC	-	-	-	-	-	-	5/C #14	B	
Z26, T19, Q5, R5	Z26	C.MWTS.OP2	MOTOR CONTROL CENTER (MCC-1)	MOTOR WINDING TEMPERATURE SWITCH, OP-2	MOTOR WINDING TEMPERATURE SWITCH, OP-2	120VAC	-	-	-	-	-	-	3/C #14	B	
Z26, T19, Q5, R5	Z26	C.HTR.OP2	MOTOR CONTROL CENTER (MCC-1)	MOTOR HEATER, OP-2	MOTOR HEATER, OP-2	120VAC	-	-	-	-	-	-	3/C #14	B	
-	-	C.FSC.OP2	MOTOR CONTROL CENTER (MCC-1)	FUEL SYSTEM CONTROL PNL (PLC-1)	OP-2 PLC CONTROL/ RUN FEEDBACK / FLOW STATUS	120VAC	2	1	-	-	-	-	9/C #14	B	
HYDRANT CART TEST STAND AND RECLAIM TANK															
TEST PUMP, TP-1															
Z8, T3, Q13, R13	Z8	P.FIT.HCTS	FUEL SYSTEM CONTROL PNL (PLC-1)	FLOW METER (FE-HCTS)	LOCAL DISPLAY/METER PULSE POWER	24VDC							3/C #14	B	LOCAL DISPLAY/METER PULSE - POWER
Z8, T3, Q13, R13	Z8	I.FIT.HCTS	FUEL SYSTEM CONTROL PNL (PLC-1)	FLOW METER (FE-HCTS)	4-20MA SIGNAL	4-20mA			1				(1) TSP #16	E	METER - SIGNAL
Z8, T3, Q13, R13	Z8	I.TT.TP1	FUEL SYSTEM CONTROL PNL (PLC-1)	MOTOR BEARING TEMPERATURE TRANSMITTER (TT-TP1)	MOTOR TEMPERATURE TRANSMITTER (TT-TP1)	4-20mA			1				(1) TSP #16	E	LOOP POWERED
Z8, T3, Q13, R13	Z8	I.VTX.TP1	FUEL SYSTEM CONTROL PNL (PLC-1)	MOTOR VIBRATION TRANSMITTERS (VT-TP1)	MOTOR VIBRATION TRANSMITTERS (VT-TP1)	4-20mA			1				(1) TSP #16	E	LOOP POWERED
Z8, T3, Q13, R13	Z8	I.VTY.TP1	FUEL SYSTEM CONTROL PNL (PLC-1)	MOTOR VIBRATION TRANSMITTERS (VT-TP1)	MOTOR VIBRATION TRANSMITTERS (VT-TP1)	4-20mA			1				(1) TSP #16	E	LOOP POWERED
Z37, T30, Q23, R23	Z37	C.HS.HCTS	VARIABLE FREQUENCY DRIVE, VFD TP1	HAND STATION (HS-HCTS)	RUN/STOP AND INDICATION LIGHTS	120VAC	-	-	-	-	-	-	6/C #14	B	
Z37, T30, Q23, R23	Z37	C.FSTS.TP1	VARIABLE FREQUENCY DRIVE, VFD-TP1	FLOW & TEMPERATURE SWITCHES TP1	FLOW & TEMPERATURE SWITCHES TP1	120VAC	-	-	-	-	-	-	7/C #14	B	
Z37, T30, Q23, R23	Z37	C.MWTS.TP1	VARIABLE FREQUENCY DRIVE, VFD-TP1	MOTOR WINDING TEMPERATURE SWITCH, TP-1	MOTOR WINDING TEMPERATURE SWITCH, TP-1	120VAC							3/C #14	B	
Z37, T30, Q23, R23	Z37	C.HTR.TP1	VARIABLE FREQUENCY DRIVE, VFD-TP1	MOTOR HEATER, TP-1	MOTOR HEATER, TP-1	120VAC							3/C #14	B	
Z8, T3, Q13, R13	Z8	I.PT.TP1	FUEL SYSTEM CONTROL PNL (PLC-1)	PRESSURE TRANSMITTER (PT-TP1)	4-20MA SIGNAL (DEVICE LOOP POWERED)	4-20mA			1				(1) TSP #16	E	LOOP POWERED
-	-	IC.FSC.TP1	VARIABLE FREQUENCY DRIVE, VFD-TP1	FUEL SYSTEM CONTROL PNL (PLC-1)	VFD COMMUNICATIONS, TP-1	EOC						1	(1) CAT 6	C	
-	-	C.FSC.TP1	VARIABLE FREQUENCY DRIVE, VFD-TP1	FUEL SYSTEM CONTROL PNL (PLC-1)	FLOW/FUEL TEMP SWITCH, PLC RUN/STOP	120VAC	2	1					9/C #14	B	
-	-	C.EFSO.VFD.TP1	VARIABLE FREQUENCY DRIVE, VFD-TP1	EFSO PANEL	EFSO INTERLOCK, TP-1	24VDC							2/C #14	B	
RECLAIM TANK															
Z9, T4, Q14, R14	Z9	C.LSHH.RCT	FUEL SYSTEM CONTROL PNL (PLC-1)	RECLAIM TANK HIGH LEVEL ALARM	HIGH HIGH LEVEL SWITCH ALARM	120VAC	1	-	-	-	-	-	4/C #14	B	
RECLAIM TANK MOVS															
Z7, T2, Q11, R11	Z7	C.FSC.MOVRCS	FUEL SYSTEM CONTROL PNL (PLC-1)	RECLAIM SUPPLY	MOV CONTROL CABLE	120VAC	3	2	-	-	-	-	9/C #14	B	
Z7, T2, Q11, R11	Z7	C.FSC.MOVRCR	FUEL SYSTEM CONTROL PNL (PLC-1)	RECLAIM RETURN	MOV CONTROL CABLE	120VAC	3	2	-	-	-	-	9/C #14	B	
RECLAIM FILTER SEPARATORS															
Z8, T3, Q13, R13	Z8	I.DPIT.RFS1	FUEL SYSTEM CONTROL PNL (PLC-1)	DIFFERENTIAL PRESSURE XMTR (DPT-RFS1)	DIFFERENTIAL PRESSURE XMTR (DPT-RFS1)	4-20mA	-	-	1	-	-	-	(1) TSP #16	E	LOOP POWERED
Z8, T3, Q13, R13	Z8	I.DPIT.RFS2	FUEL SYSTEM CONTROL PNL (PLC-1)	DIFFERENTIAL PRESSURE XMTR (DPT-RFS2)	DIFFERENTIAL PRESSURE XMTR (DPT-HFS2)	4-20mA	-	-	1	-	-	-	(1) TSP #16	E	LOOP POWERED
Z9, T4, Q14, R14	Z9	C.MS.RFS1	FUEL SYSTEM CONTROL PNL (PLC-1)	MOISTURE SWITCH (MS-RFS1)	PWR / CNTRL TO MOISTURE SWITCH	120VAC	1	-	-	-	-	-	4/C #14	B	
-	-	IS.ME.RFS1	MOISTURE SWITCH	MOISTURE SENSOR	MOISTURE SENSOR TO MOISTURE CONTROLLER	I.S.	-	-	-	-	-	-	VENDOR FURNISHED	-	
-	-	C.JY.RFS1	MOISTURE SENSOR	WATER SLUG VALVE (SOLENOID)	FLOW CONTROL VALVE	120VAC	-	-	-	-	-	-	3/C #14	B	
Z9, T4, Q14, R14	Z9	C.MS.RFS2	FUEL SYSTEM CONTROL PNL (PLC-1)	MOISTURE SWITCH (MS-RFS2)	PWR / CNTRL TO MOISTURE SWITCH	120VAC	1	-	-	-	-	-	4/C #14	B	
-	-	IS.ME.RFS2	MOISTURE SWITCH	MOISTURE SENSOR	MOISTURE SENSOR TO MOISTURE CONTROLLER	I.S.	-	-	-	-	-	-	VENDOR FURNISHED	-	
-	-	C.JY.RFS2	MOISTURE SENSOR	WATER SLUG VALVE (SOLENOID)	FLOW CONTROL VALVE	120VAC	-	-	-	-	-	-	3/C #14	B	
HYDRANT CART TEST STAND ALARM PANEL															
Z22, T15, Q2, R2	Z22	C.FSC.HCTSAP	FUEL SYSTEM CONTROL PNL (PLC-1)	HYDRANT CART TEST STAND ALARM PANEL	ALARM INDICATION LIGHTS	120VAC	-	10	-	-	-	-	19/C	B	

NOTES:

1. CIRCUIT FOUND WITHIN CIRCUITS I.FSC.CJB1.3 AND I.FSC.CJB1.4.
2. CIRCUIT FOUND WITHIN CIRCUITS C.FSC.CJB1.1 AND C.FSC.CJB1.2.
3. DIRECT BURIED TO GENERATOR.
4. DIRECT BURIED TO EXTERIOR LIGHT POLE.

12/20/2023

REGISTERED PROFESSIONAL ENGINEER 100084PE OREGON JULY 12, 2021 TIMOTHY RENSHAW

EXPIRES: 12/31/2024

no.	date	by	ckd	description
A	12/21/23	TSR	BAW	ISSUED FOR PERMIT

ISSUED FOR PERMIT ONLY

BURNS McDONNELL
9400 WARD PARKWAY
KANSAS CITY, MO 64114
816-333-9400
Burns & McDonnell Engineering Co, Inc.

date	detailed
04/24/2023	S. JESBERG
designed	checked
T. RENSHAW	B. WINTER

PDX FUEL COMPANY L.L.C

PORTLAND INTERNATIONAL AIRPORT
5000 NE MARINE DR.
PORTLAND, OREGON 97218

PDX FACILITY IMPROVEMENTS
CABLE SCHEDULE - 2

project	contract
153929	

drawing **E-704** rev. **A**

file 153929E-704.dwg

CONTROL CIRCUIT SCHEDULE

DUCTBANK SECTION(S)	PDC STUB UP	CONTROL CIRCUIT SCHEDULE	FROM	TO	PURPOSE	SIGNAL	PLC I/O DI	PLC I/O DO	PLC I/O AI	PLC I/O AO	PLC I/O PULSE	PLC I/O COMM	CONDUCTORS QUANTITY AND SIZE	CONDUCTORS TYPE	NOTES
TANK FARM															
TANK CONTROL															
D2	**D2**	**C.FSC.T5A**	**FUEL SYSTEM CONTROL PNL (PLC-1)**	**TANK 5 - MOV 5A**	**TANK 5 - MOV 5A CONTROL**	**120VAC**	**-**	**-**	**-**	**-**	**-**	**-**	**9/C #14**	**A / B**	**USE TYPE B IN CABLE TRAY**
D2	**D2**	**C.FSC.T5B**	**FUEL SYSTEM CONTROL PNL (PLC-1)**	**TANK 5 - MOV 5B**	**TANK 5 - MOV 5B CONTROL**	**120VAC**	**-**	**-**	**-**	**-**	**-**	**-**	**9/C #14**	**A / B**	**USE TYPE B IN CABLE TRAY**
D2	**D2**	**C.FSC.T6A**	**FUEL SYSTEM CONTROL PNL (PLC-1)**	**TANK 6 - MOV 6A**	**TANK 6 - MOV 6A CONTROL**	**120VAC**	**-**	**-**	**-**	**-**	**-**	**-**	**9/C #14**	**A / B**	**USE TYPE B IN CABLE TRAY**
D2	**D2**	**C.FSC.T6B**	**FUEL SYSTEM CONTROL PNL (PLC-1)**	**TANK 6 - MOV 6B**	**TANK 6 - MOV 6B CONTROL**	**120VAC**	**-**	**-**	**-**	**-**	**-**	**-**	**9/C #14**	**A / B**	**USE TYPE B IN CABLE TRAY**
D2	**D2**	**C.FSC.T7A**	**FUEL SYSTEM CONTROL PNL (PLC-1)**	**TANK 7 - MOV 7A**	**TANK 7 - MOV 7A CONTROL**	**120VAC**	**-**	**-**	**-**	**-**	**-**	**-**	**9/C #14**	**A / B**	**USE TYPE B IN CABLE TRAY**
D2	**D2**	**C.FSC.T7B**	**FUEL SYSTEM CONTROL PNL (PLC-1)**	**TANK 7 - MOV 7B**	**TANK 7 - MOV 7B CONTROL**	**120VAC**	**-**	**-**	**-**	**-**	**-**	**-**	**9/C #14**	**A / B**	**USE TYPE B IN CABLE TRAY**
D2	**D2**	**C.DSLSH.T5**	**FUEL SYSTEM CONTROL PNL (PLC-1)**	**FIELD DEWATERING SUMP LEVEL SWITCH**	**DEWATERING SUMP LEVEL SWITCH HIGH - (DSLSH)**	**120VAC**	**-**	**-**	**-**	**-**	**-**	**-**	**3/C #14**	**A / B**	**USE TYPE B IN CABLE TRAY**
D2	**D2**	**C.DSLSH.T6**	**FUEL SYSTEM CONTROL PNL (PLC-1)**	**FIELD DEWATERING SUMP LEVEL SWITCH**	**DEWATERING SUMP LEVEL SWITCH HIGH - (DSLSH)**	**120VAC**	**-**	**-**	**-**	**-**	**-**	**-**	**3/C #14**	**A / B**	**USE TYPE B IN CABLE TRAY**
D2	**D2**	**C.DSLSH.T7**	**FUEL SYSTEM CONTROL PNL (PLC-1)**	**FIELD DEWATERING SUMP LEVEL SWITCH**	**DEWATERING SUMP LEVEL SWITCH HIGH - (DSLSH)**	**120VAC**	**-**	**-**	**-**	**-**	**-**	**-**	**3/C #14**	**A / B**	**USE TYPE B IN CABLE TRAY**
D2	**D2**	**P.FSC.ATG**	**FUEL SYSTEM CONTROL PNL (PLC-1)**	**ATG POWER TERMINAL BOX**	**POWER TO TANK ATG**	**120VAC**	**-**	**-**	**-**	**-**	**-**	**-**	**2-#12 + #12 GND**	**A**	
F19, G21, J6	F19	C.TANK1.CTLP	FUEL SYSTEM CONTROL PNL (PLC-1)	ROSEMOUNT TANK HUB 2410 - TANK 1	CONTROL POWER FOR TANK INSTRUMENTS	120VAC							3/C #14	B	
F19, G21, J6	F19	C.TANK2.CTLP	FUEL SYSTEM CONTROL PNL (PLC-1)	ROSEMOUNT TANK HUB 2410 - TANK 2	CONTROL POWER FOR TANK INSTRUMENTS	120VAC							3/C #14	B	
F19, G21, J6	F19	C.TANK3.CTLP	FUEL SYSTEM CONTROL PNL (PLC-1)	ROSEMOUNT TANK HUB 2410 - TANK 3	CONTROL POWER FOR TANK INSTRUMENTS	120VAC							3/C #14	B	
F15, G7, J1	F15	C.MOV1A.CTL	FUEL SYSTEM CONTROL PNL (PLC-1)	TANK 1 - MOV 1A	TANK 1 - MOV 1A CONTROL	120VAC	3	2					9/C #14	B	
F15, G7, J1	F15	C.MOV1B.CTL	FUEL SYSTEM CONTROL PNL (PLC-1)	TANK 1 - MOV 1B	TANK 1 - MOV 1B CONTROL	120VAC	3	2					9/C #14	B	
F15, G7, J1	F15	C.MOV2A.CTL	FUEL SYSTEM CONTROL PNL (PLC-1)	TANK 2 - MOV 2A	TANK 2 - MOV 2A CONTROL	120VAC	3	2					9/C #14	B	
F15, G7, J1	F15	C.MOV2B.CTL	FUEL SYSTEM CONTROL PNL (PLC-1)	TANK 2 - MOV 2B	TANK 2 - MOV 2B CONTROL	120VAC	3	2					9/C #14	B	
F15, G7, J1	F15	C.MOV3A.CTL	FUEL SYSTEM CONTROL PNL (PLC-1)	TANK 3 - MOV 3A	TANK 3 - MOV 3A CONTROL	120VAC	3	2					9/C #14	B	
F15, G7, J1	F15	C.MOV3B.CTL	FUEL SYSTEM CONTROL PNL (PLC-1)	TANK 3 - MOV 3B	TANK 3 - MOV 3B CONTROL	120VAC	3	2					9/C #14	B	
POWER DISTRIBUTION CENTER (PDC)															
EFSO PANEL															
D5	**D5**	**C.LS.T5**	**EFSO PANEL - FUEL FACILITY**	**FIELD LEVEL SWITCH**	**TANK LEVEL SWITCH**	**120VAC**	**-**	**-**	**-**	**-**	**-**	**-**	**9/C #14**	**A / B**	**USE TYPE B IN CABLE TRAY**
D5	**D5**	**C.LS.T6**	**EFSO PANEL - FUEL FACILITY**	**FIELD LEVEL SWITCH**	**TANK LEVEL SWITCH**	**120VAC**	**-**	**-**	**-**	**-**	**-**	**-**	**9/C #14**	**A / B**	**USE TYPE B IN CABLE TRAY**
D5	**D5**	**C.LS.T7**	**EFSO PANEL - FUEL FACILITY**	**FIELD LEVEL SWITCH**	**TANK LEVEL SWITCH**	**120VAC**	**-**	**-**	**-**	**-**	**-**	**-**	**9/C #14**	**A / B**	**USE TYPE B IN CABLE TRAY**
D5	**D5**	**C.EFSO.T5A**	**EFSO PANEL - FUEL FACILITY**	**TANK 5 - SUCTION MOV**	**TANK 5 - MOV, EFSO INTERLOCK**	**120VAC**	**-**	**-**	**-**	**-**	**-**	**-**	**3/C #14**	**A / B**	**USE TYPE B IN CABLE TRAY**
D5	**D5**	**C.EFSO.T5B**	**EFSO PANEL - FUEL FACILITY**	**TANK 5 - FILL MOV**	**TANK 5 - MOV, EFSO INTERLOCK**	**120VAC**	**-**	**-**	**-**	**-**	**-**	**-**	**3/C #14**	**A / B**	**USE TYPE B IN CABLE TRAY**
D5	**D5**	**C.EFSO.T6A**	**EFSO PANEL - FUEL FACILITY**	**TANK 6 - SUCTION MOV**	**TANK 6 - MOV, EFSO INTERLOCK**	**120VAC**	**-**	**-**	**-**	**-**	**-**	**-**	**3/C #14**	**A / B**	**USE TYPE B IN CABLE TRAY**
D5	**D5**	**C.EFSO.T6B**	**EFSO PANEL - FUEL FACILITY**	**TANK 6 - FILL MOV**	**TANK 6 - MOV, EFSO INTERLOCK**	**120VAC**	**-**	**-**	**-**	**-**	**-**	**-**	**3/C #14**	**A / B**	**USE TYPE B IN CABLE TRAY**
D5	**D5**	**C.EFSO.T7A**	**EFSO PANEL - FUEL FACILITY**	**TANK 7 - SUCTION MOV**	**TANK 7 - MOV, EFSO INTERLOCK**	**120VAC**	**-**	**-**	**-**	**-**	**-**	**-**	**3/C #14**	**A / B**	**USE TYPE B IN CABLE TRAY**
D5	**D5**	**C.EFSO.T7B**	**EFSO PANEL - FUEL FACILITY**	**TANK 7 - FILL MOV**	**TANK 7 - MOV, EFSO INTERLOCK**	**120VAC**	**-**	**-**	**-**	**-**	**-**	**-**	**3/C #14**	**A / B**	**USE TYPE B IN CABLE TRAY**
D5	**D5**	**C.EFSO.T5W**	**EFSO PANEL - FUEL FACILITY**	**HAND STATION - EFSO**	**EFSO PUSHBUTTON AT TANK**	**120VAC**	**-**	**-**	**-**	**-**	**-**	**-**	**3/C #14**	**A / B**	**USE TYPE B IN CABLE TRAY**
D5	**D5**	**C.EFSO.T5E**	**EFSO PANEL - FUEL FACILITY**	**HAND STATION - EFSO**	**EFSO PUSHBUTTON AT TANK**	**120VAC**	**-**	**-**	**-**	**-**	**-**	**-**	**3/C #14**	**A / B**	**USE TYPE B IN CABLE TRAY**
D5	**D5**	**C.EFSO.T5I**	**EFSO PANEL - FUEL FACILITY**	**HAND STATION - EFSO**	**EFSO PUSHBUTTON AT TANK**	**120VAC**	**-**	**-**	**-**	**-**	**-**	**-**	**3/C #14**	**A / B**	**USE TYPE B IN CABLE TRAY**
D5	**D5**	**C.EFSO.T6W**	**EFSO PANEL - FUEL FACILITY**	**HAND STATION - EFSO**	**EFSO PUSHBUTTON AT TANK**	**120VAC**	**-**	**-**	**-**	**-**	**-**	**-**	**3/C #14**	**A / B**	**USE TYPE B IN CABLE TRAY**
D5	**D5**	**C.EFSO.T6E**	**EFSO PANEL - FUEL FACILITY**	**HAND STATION - EFSO**	**EFSO PUSHBUTTON AT TANK**	**120VAC**	**-**	**-**	**-**	**-**	**-**	**-**	**3/C #14**	**A / B**	**USE TYPE B IN CABLE TRAY**
D5	**D5**	**C.EFSO.T6I**	**EFSO PANEL - FUEL FACILITY**	**HAND STATION - EFSO**	**EFSO PUSHBUTTON AT TANK**	**120VAC**	**-**	**-**	**-**	**-**	**-**	**-**	**3/C #14**	**A / B**	**USE TYPE B IN CABLE TRAY**
D5	**D5**	**C.EFSO.T7W**	**EFSO PANEL - FUEL FACILITY**	**HAND STATION - EFSO**	**EFSO PUSHBUTTON AT TANK**	**120VAC**	**-**	**-**	**-**	**-**	**-**	**-**	**3/C #14**	**A / B**	**USE TYPE B IN CABLE TRAY**
D5	**D5**	**C.EFSO.T7E**	**EFSO PANEL - FUEL FACILITY**	**HAND STATION - EFSO**	**EFSO PUSHBUTTON AT TANK**	**120VAC**	**-**	**-**	**-**	**-**	**-**	**-**	**3/C #14**	**A / B**	**USE TYPE B IN CABLE TRAY**
D5	**D5**	**C.EFSO.T7I**	**EFSO PANEL - FUEL FACILITY**	**HAND STATION - EFSO**	**EFSO PUSHBUTTON AT TANK**	**120VAC**	**-**	**-**	**-**	**-**	**-**	**-**	**3/C #14**	**A / B**	**USE TYPE B IN CABLE TRAY**
K3	K3	C.EFSO.OPSRM	EFSO PANEL - FUEL FACILITY	HAND STATION - EFSO OPERATIONS ROOM	EFSO PUSHBUTTON IN OPERATIONS ROOM	120VAC							2/C #14	B	
Z1, T14, Q1, R1	**Z1**	**C.EFSO.HCTS**	**EFSO PANEL - FUEL FACILITY**	**HAND STATION - EFSO HCTS**	**EFSO PUSHBUTON BY HYDRANT CART TEST STAND**	**120VAC**							**2/C #14**	**B**	
Z1, T9, L1	**Z1**	**C.EFSO.OP1**	**EFSO PANEL - FUEL FACILITY**	**HAND STATION - EFSO OP1**	**EFSO PUSHBUTTON BY OFFLOAD PUMP 1**	**120VAC**	**-**	**-**	**-**	**-**	**-**	**-**	**2/C #14**	**B**	
Z1, T14, Q1, R1	**Z1**	**C.EFSO.OP2**	**EFSO PANEL - FUEL FACILITY**	**HAND STATION - EFSO OP2**	**EFSO PUSHBUTTON BY OFFLOAD PUMP 2**	**120VAC**							**2/C #14**	**B**	
F16, G8, J2	NOTE 2	C.EFSO.T3EX	EFSO PANEL - FUEL FACILITY	HAND STATION - EFSO T3EX	EFSO PUSHBUTTON AT TANK 3 AREA EXIT	120VAC	-	-	-	-	-	-	2/C #14	B	
F16, G8, J2	NOTE 2	C.EFSO.T12EX	EFSO PANEL - FUEL FACILITY	HAND STATION - EFSO T12EX	EFSO PUSHBUTTON AT TANK 1&2 AREA EXIT	120VAC	-	-	-	-	-	-	2/C #14	B	
F16, G8, J2	NOTE 2	C.EFSO.PPA	EFSO PANEL - FUEL FACILITY	HAND STATION - EFSO PPA	EFSO PUSHBUTTON IN PUMP PAD AREA	120VAC	-	-	-	-	-	-	2/C #14	B	
F20, E4	F20	C.EFSO.AIRSIDE	EFSO PANEL - FUEL FACILITY	ROOM 1660 RELAY PANEL	EFSO ALARM RELAY PANEL IN ROOM 1660	120VAC							2/C #14	B	
F15, G7, J1	F15	C.EFSO.MOV1A	EFSO PANEL - FUEL FACILITY	TANK 1 - MOV 1A	TANK 1 - MOV 1A, EFSO INTERLOCK	120VAC							2/C #14	B	
F15, G7, J1	F15	C.EFSO.MOV1B	EFSO PANEL - FUEL FACILITY	TANK 1 - MOV 1B	TANK 1 - MOV 1B, EFSO INTERLOCK	120VAC							2/C #14	B	
F15, G7, J1	F15	C.EFSO.MOV2A	EFSO PANEL - FUEL FACILITY	TANK 2 - MOV 2A	TANK 2 - MOV 2A, EFSO INTERLOCK	120VAC							2/C #14	B	
F15, G7, J1	F15	C.EFSO.MOV2B	EFSO PANEL - FUEL FACILITY	TANK 2 - MOV 2B	TANK 2 - MOV 2B, EFSO INTERLOCK	120VAC							2/C #14	B	
F15, G7, J1	F15	C.EFSO.MOV3A	EFSO PANEL - FUEL FACILITY	TANK 3 - MOV 3A	TANK 3 - MOV 3A, EFSO INTERLOCK	120VAC							2/C #14	B	
F15, G7, J1	F15	C.EFSO.MOV3B	EFSO PANEL - FUEL FACILITY	TANK 3 - MOV 3B	TANK 3 - MOV 3B, EFSO INTERLOCK	120VAC							2/C #14	B	
Z7, T2, Q11, R11	**Z7**	**C.EFSO.MOVRCS**	**EFSO PANEL - FUEL FACILITY**	**CANOPY - MOV RCS**	**MOV RCS, EFSO INTERLOCK**	**120VAC**	**-**	**-**	**-**	**-**	**-**	**-**	**2/C #14**	**B**	
Z7, T2, Q11, R11	**Z7**	**C.EFSO.MOVRCR**	**EFSO PANEL - FUEL FACILITY**	**CANOPY - MOV RCR**	**MOV RCR, EFSO INTERLOCK**	**120VAC**	**-**	**-**	**-**	**-**	**-**	**-**	**2/C #14**	**B**	
F19, G21, J6	F19	C.LSHH.T1	EFSO PANEL - FUEL FACILITY	FIELD LEVEL SWITCH	LEVEL SWITCH HIGH - TANK 1 (LSHH-T1)	120VAC	-						3/C #14	B	
F19, G21, J6	F19	C.LSHH.T2	EFSO PANEL - FUEL FACILITY	FIELD LEVEL SWITCH	LEVEL SWITCH HIGH - TANK 2 (LSHH-T2)	120VAC	-						3/C #14	B	
F19, G21, J6	F19	C.LSHH.T3	EFSO PANEL - FUEL FACILITY	FIELD LEVEL SWITCH	LEVEL SWITCH HIGH - TANK 3 (LSHH-T3)	120VAC	-						3/C #14	B	
-	-	C.EFSO.BYPASS	EFSO PANEL - FUEL FACILITY	FUEL SYSTEM CONTROL PNL (PLC-1)	PLC INDICATION THAT EFSO IS IN BYPASS	120VAC	1						2/C #14	B	
-	-	C.LSHH.T1.2	EFSO PANEL - FUEL FACILITY	FUEL SYSTEM CONTROL PNL (PLC-1)	LEVEL SWITCH HIGH - TANK 1 (LSHH-T1)	120VAC	1						2/C #14	B	
-	-	C.LSHH.T2.2	EFSO PANEL - FUEL FACILITY	FUEL SYSTEM CONTROL PNL (PLC-1)	LEVEL SWITCH HIGH - TANK 2 (LSHH-T2)	120VAC	1						2/C #14	B	
-	-	C.LSHH.T3.2	EFSO PANEL - FUEL FACILITY	FUEL SYSTEM CONTROL PNL (PLC-1)	LEVEL SWITCH HIGH - TANK 3 (LSHH-T3)	120VAC	1						2/C #14	B	
-	-	C.EFSO.R1.2	EFSO PANEL - FUEL FACILITY	FUEL SYSTEM CONTROL PNL (PLC-1)	CONTROL ROOM (IN PDC) - EFSO STATUS	120VAC	1						2/C #14	B	
-	**-**	**C.EFSO.R2.2**	**EFSO PANEL - FUEL FACILITY**	**FUEL SYSTEM CONTROL PNL (PLC-1)**	**HCTS/EAST EXIT EFSO STATUS**	**120VAC**	**1**						**2/C #14**	**B**	
-	**-**	**C.EFSO.R3.2**	**EFSO PANEL - FUEL FACILITY**	**FUEL SYSTEM CONTROL PNL (PLC-1)**	**OFFLOAD EFSO STATUS**	**120VAC**	**1**						**2/C #14**	**B**	
-	-	C.EFSO.R4.2	EFSO PANEL - FUEL FACILITY	FUEL SYSTEM CONTROL PNL (PLC-1)	TANK/PUMP PAD EFSO STATUS	120VAC	1						2/C #14	B	
-	-	C.EFSO.R5.2	EFSO PANEL - FUEL FACILITY	FUEL SYSTEM CONTROL PNL (PLC-1)	AIRSIDE ACTIVATION	120VAC	1						2/C #14	B	
-	-	C.EFSO.R6.2	EFSO PANEL - FUEL FACILITY	FUEL SYSTEM CONTROL PNL (PLC-1)	OPERATIONS ROOM EFSO STATUS	120VAC	1						2/C #14	B	
-	-	C.EFSO.R1.3	EFSO PANEL - FUEL FACILITY	FIRE ALARM CONTROL UNIT (FACU)	CONTROL ROOM (IN PDC) - EFSO STATUS	120VAC	-	-	-	-	-	-	2/C #14	B	
-	-	C.EFSO.R2.3	EFSO PANEL - FUEL FACILITY	FIRE ALARM CONTROL UNIT (FACU)	HCTS/EAST EXIT EFSO STATUS	120VAC	-	-	-	-	-	-	2/C #14	B	
-	-	C.EFSO.R3.3	EFSO PANEL - FUEL FACILITY	FIRE ALARM CONTROL UNIT (FACU)	OFFLOAD EFSO STATUS	120VAC	-	-	-	-	-	-	2/C #14	B	
-	-	C.EFSO.R4.3	EFSO PANEL - FUEL FACILITY	FIRE ALARM CONTROL UNIT (FACU)	TANK/PUMP PAD EFSO STATUS	120VAC	-	-	-	-	-	-	2/C #14	B	
-	-	C.EFSO.R5.3	EFSO PANEL - FUEL FACILITY	FIRE ALARM CONTROL UNIT (FACU)	AIRSIDE ACTIVATION	120VAC	-	-	-	-	-	-	2/C #14	B	
-	-	C.EFSO.R6.3	EFSO PANEL - FUEL FACILITY	FIRE ALARM CONTROL UNIT (FACU)	OPERATIONS ROOM EFSO STATUS	120VAC	-	-	-	-	-	-	2/C #14	B	
-	-	C.EFSO.ALRM	EFSO PANEL - FUEL FACILITY	EXTERIOR ALARM HORN	EXTERIOR AUDIBLE ALARM	120VAC	-	-	-	-	-	-	2/C #14	B	
-	-	C.FSC.RSILENCE	FUEL SYSTEM CONTROL PNL (PLC-1)	EFSO PANEL - FUEL FACILITY	PLC REMOTE SILENCE OF EFSO PANEL	120VAC	-	1	-	-	-	-	2/C #14	B	
-	-	C.FSC.RBYPASS	FUEL SYSTEM CONTROL PNL (PLC-1)	EFSO PANEL - FUEL FACILITY	PLC REMOTE BYPASS OF EFSO PANEL	120VAC	-	1	-	-	-	-	2/C #14	B	

NOTES:

1. CIRCUIT FOUND WITHIN CIRCUITS I.FSC.CJB1.3 AND I.FSC.CJB1.4.
2. CIRCUIT FOUND WITHIN CIRCUITS C.FSC.CJB1.1 AND C.FSC.CJB1.2.
3. DIRECT BURIED TO GENERATOR.
4. DIRECT BURIED TO EXTERIOR LIGHT POLE.

12/20/2023

REGISTERED PROFESSIONAL ENGINEER 100084PE OREGON JULY 12, 2001 TIMOTHY RENSHAW

EXPIRES: 12/31/2024

no.	date	by	ckd	description
A	12/21/23	TSR	BAW	ISSUED FOR PERMIT

ISSUED FOR PERMIT ONLY

BURNS McDONNELL
9400 WARD PARKWAY
KANSAS CITY, MO 64114
816-333-9400
Burns & McDonnell Engineering Co, Inc.

date	detailed
04/24/2023	S. JESBERG
designed	checked
T. RENSHAW	B. WINTER

PDX FUEL COMPANY L.L.C

PORTLAND INTERNATIONAL AIRPORT
5000 NE MARINE DR.
PORTLAND, OREGON 97218

PDX FACILITY IMPROVEMENTS
CABLE SCHEDULE - 3

project	contract
153929	

drawing **E-705** rev. **A**

file 153929E-705.dwg

CONTROL CIRCUIT SCHEDULE

DUCTBANK SECTION(S)	PDC STUB UP	CONTROL CIRCUIT SCHEDULE	FROM	TO	PURPOSE	SIGNAL	PLC I/O DI	PLC I/O DO	PLC I/O AI	PLC I/O AO	PLC I/O PULSE	PLC I/O COMM	CONDUCTORS QUANTITY AND SIZE	CONDUCTORS TYPE	NOTES
PANELBOARDS															
F1, G1, I1	F1	P.PNL5.1	PANELBOARD 5	SEE PANEL SCHDL.	SEE PANEL SCHDL.	480VAC	-	-	-	-	-	-	SEE PANEL SCHDL.	A	
F1, G1, I1	F1	P.PNL5.2	PANELBOARD 5	SEE PANEL SCHDL.	SEE PANEL SCHDL.	480VAC	-	-	-	-	-	-	SEE PANEL SCHDL.	A	
F1, G1, I1	F1	P.PNL5.7	PANELBOARD 5	SEE PANEL SCHDL.	SEE PANEL SCHDL.	480VAC	-	-	-	-	-	-	SEE PANEL SCHDL.	A	
F10, G2, I7	F10	P.PNL5.8	PANELBOARD 5	SEE PANEL SCHDL.	SEE PANEL SCHDL.	480VAC	-	-	-	-	-	-	SEE PANEL SCHDL.	A	
F10, G2, I7	F10	P.PNL5.13	PANELBOARD 5	SEE PANEL SCHDL.	SEE PANEL SCHDL.	480VAC	-	-	-	-	-	-	SEE PANEL SCHDL.	A	
F10, G2, I7	F10	P.PNL5.14	PANELBOARD 5	SEE PANEL SCHDL.	SEE PANEL SCHDL.	480VAC	-	-	-	-	-	-	SEE PANEL SCHDL.	A	
Z25, T18, Q12, R12	**Z25**	**P.PNL5.19**	**PANELBOARD 5**	**SEE PANEL SCHDL.**	**SEE PANEL SCHDL.**	**480VAC**	**-**	**-**	**-**	**-**	**-**	**-**	**SEE PANEL SCHDL.**	**A**	
Z3, T32, Q6,S3	**Z3**	**P.PNL5.26**	**PANELBOARD 5**	**SEE PANEL SCHDL.**	**SEE PANEL SCHDL.**	**480VAC**	**-**	**-**	**-**	**-**	**-**	**-**	**SEE PANEL SCHDL.**	**A**	
D29	**D29**	**P.PNL5.32**	**PANELBOARD 5**	**SEE PANEL SCHDL.**	**SEE PANEL SCHDL.**	**480VAC**	**-**	**-**	**-**	**-**	**-**	**-**	**SEE PANEL SCHDL.**	**A / B**	**USE TYPE B IN CABLE TRAY**
D29	**D29**	**P.PNL5.37**	**PANELBOARD 5**	**SEE PANEL SCHDL.**	**SEE PANEL SCHDL.**	**480VAC**	**-**	**-**	**-**	**-**	**-**	**-**	**SEE PANEL SCHDL.**	**A / B**	**USE TYPE B IN CABLE TRAY**
D29	**D29**	**P.PNL5.38**	**PANELBOARD 5**	**SEE PANEL SCHDL.**	**SEE PANEL SCHDL.**	**480VAC**	**-**	**-**	**-**	**-**	**-**	**-**	**SEE PANEL SCHDL.**	**A / B**	**USE TYPE B IN CABLE TRAY**
-	-	P.PNL6.7	PANELBOARD 6	SEE PANEL SCHDL.	SEE PANEL SCHDL.	480VAC	-	-	-	-	-	-	SEE PANEL SCHDL.	A	
F1, G1, I1	F1	P.PNL6.8	PANELBOARD 6	SEE PANEL SCHDL.	SEE PANEL SCHDL.	480VAC	-	-	-	-	-	-	SEE PANEL SCHDL.	A	
-	-	P.PNL6.11	PANELBOARD 6	SEE PANEL SCHDL.	SEE PANEL SCHDL.	480VAC	-	-	-	-	-	-	SEE PANEL SCHDL.	A	
D38	**D38**	**P.PNL6.30**	**PANELBOARD 6**	**SEE PANEL SCHDL.**	**SEE PANEL SCHDL.**	**208VAC**	**-**	**-**	**-**	**-**	**-**	**-**	**SEE PANEL SCHDL.**	**A / B**	**USE TYPE B IN CABLE TRAY**
D38	**D38**	**P.PNL6.31**	**PANELBOARD 6**	**SEE PANEL SCHDL.**	**SEE PANEL SCHDL.**	**208VAC**	**-**	**-**	**-**	**-**	**-**	**-**	**SEE PANEL SCHDL.**	**A / B**	**USE TYPE B IN CABLE TRAY**
Z35, T28, Q20, R20	**Z35**	**P.PNL6.34**	**PANELBOARD 6**	**SEE PANEL SCHDL.**	**SEE PANEL SCHDL.**	**208VAC**	**-**	**-**	**-**	**-**	**-**	**-**	**SEE PANEL SCHDL.**	**A**	**-**
D38	**D38**	**P.PNL6.35**	**PANELBOARD 6**	**SEE PANEL SCHDL.**	**SEE PANEL SCHDL.**	**208VAC**	**-**	**-**	**-**	**-**	**-**	**-**	**SEE PANEL SCHDL.**	**A / B**	**USE TYPE B IN CABLE TRAY**
-	NOTE 3	P.PNL6.14	PANELBOARD 6	SEE PANEL SCHDL.	SEE PANEL SCHDL.	480VAC	-	-	-	-	-	-	SEE PANEL SCHDL.	A	
-	-	P.LP1.1	PANELBOARD LP1	SEE PANEL SCHDL.	SEE PANEL SCHDL.	480VAC	-	-	-	-	-	-	SEE PANEL SCHDL.	A	
-	-	P.LP1.2	PANELBOARD LP1	SEE PANEL SCHDL.	SEE PANEL SCHDL.	480VAC	-	-	-	-	-	-	SEE PANEL SCHDL.	A	
-	NOTE 4	P.LP1.3	PANELBOARD LP1	SEE PANEL SCHDL.	SEE PANEL SCHDL.	480VAC	-	-	-	-	-	-	SEE PANEL SCHDL.	A	
-	-	P.LP1.4	PANELBOARD LP1	SEE PANEL SCHDL.	SEE PANEL SCHDL.	480VAC	-	-	-	-	-	-	SEE PANEL SCHDL.	A	
-	-	P.LP1.5	PANELBOARD LP1	SEE PANEL SCHDL.	SEE PANEL SCHDL.	480VAC	-	-	-	-	-	-	SEE PANEL SCHDL.	A	
-	**-**	**P.LP1.7**	**PANELBOARD LP1**	**LIGHTING CONTACTOR**	**SEE PANEL SCHDL.**	**208VAC**	**-**	**-**	**-**	**-**	**-**	**-**	**SEE PANEL SCHDL.**	**A**	
Z14, T31, L3	**Z14**	**P.LP1.7.1**	**PANELBOARD LP1**	**SEE PANEL SCHDL.**	**SEE PANEL SCHDL.**	**208VAC**	**-**	**-**	**-**	**-**	**-**	**-**	**SEE PANEL SCHDL.**	**A**	**.1, DOWNSTREAM OF CONTACTOR**
Z14, T28, Q20, R20	**Z14**	**P.LP1.11**	**PANELBOARD LP1**	**SEE PANEL SCHDL.**	**SEE PANEL SCHDL.**	**120VAC**	**-**	**-**	**-**	**-**	**-**	**-**	**SEE PANEL SCHDL.**	**A**	
-	**-**	**P.LP1.20**	**PANELBOARD LP1**	**LIGHTING CONTACTOR**	**SEE PANEL SCHDL.**	**208VAC**	**-**	**-**	**-**	**-**	**-**	**-**	**SEE PANEL SCHDL.**	**A**	
D18	**D18**	**P.LP1.20.1**	**LIGHTING CONTACTOR**	**SEE PANEL SCHDL.**	**SEE PANEL SCHDL.**	**208VAC**	**-**	**-**	**-**	**-**	**-**	**-**	**SEE PANEL SCHDL.**	**A / B**	**USE TYPE B IN CABLE TRAY**
-	**-**	**P.LP1.21**	**PANELBOARD LP1**	**LIGHTING CONTACTOR**	**SEE PANEL SCHDL.**	**120VAC**	**-**	**-**	**-**	**-**	**-**	**-**	**SEE PANEL SCHDL.**	**A**	
D18	**D18**	**P.LP1.21.1**	**LIGHTING CONTACTOR**	**SEE PANEL SCHDL.**	**SEE PANEL SCHDL.**	**120VAC**	**-**	**-**	**-**	**-**	**-**	**-**	**SEE PANEL SCHDL.**	**A / B**	**USE TYPE B IN CABLE TRAY**
-	**-**	**P.LP1.23**	**PANELBOARD LP1**	**LIGHTING CONTACTOR**	**SEE PANEL SCHDL.**	**120VAC**	**-**	**-**	**-**	**-**	**-**	**-**	**SEE PANEL SCHDL.**	**A**	
D18	**D18**	**P.LP1.23.1**	**LIGHTING CONTACTOR**	**SEE PANEL SCHDL.**	**SEE PANEL SCHDL.**	**120VAC**	**-**	**-**	**-**	**-**	**-**	**-**	**SEE PANEL SCHDL.**	**A / B**	**USE TYPE B IN CABLE TRAY**
-	**-**	**P.LP1.24**	**PANELBOARD LP1**	**LIGHTING CONTACTOR**	**SEE PANEL SCHDL.**	**208VAC**	**-**	**-**	**-**	**-**	**-**	**-**	**SEE PANEL SCHDL.**	**A**	
D18	**D18**	**P.LP1.24.1**	**LIGHTING CONTACTOR**	**SEE PANEL SCHDL.**	**SEE PANEL SCHDL.**	**208VAC**	**-**	**-**	**-**	**-**	**-**	**-**	**SEE PANEL SCHDL.**	**A / B**	**USE TYPE B IN CABLE TRAY**
-	**-**	**P.LP1.25**	**PANELBOARD LP1**	**LIGHTING CONTACTOR**	**SEE PANEL SCHDL.**	**120VAC**	**-**	**-**	**-**	**-**	**-**	**-**	**SEE PANEL SCHDL.**	**A**	
D18	**D18**	**P.LP1.25.1**	**LIGHTING CONTACTOR**	**SEE PANEL SCHDL.**	**SEE PANEL SCHDL.**	**120VAC**	**-**	**-**	**-**	**-**	**-**	**-**	**SEE PANEL SCHDL.**	**A / B**	**USE TYPE B IN CABLE TRAY**
D42	**D42**	**P.LP1.32**	**PANELBOARD LP1**	**SEE PANEL SCHDL.**	**SEE PANEL SCHDL.**	**120VAC**	**-**	**-**	**-**	**-**	**-**	**-**	**SEE PANEL SCHDL.**	**A / B**	**USE TYPE B IN CABLE TRAY**
D42	**D42**	**P.LP1.34**	**PANELBOARD LP1**	**SEE PANEL SCHDL.**	**SEE PANEL SCHDL.**	**120VAC**	**-**	**-**	**-**	**-**	**-**	**-**	**SEE PANEL SCHDL.**	**A / B**	**USE TYPE B IN CABLE TRAY**
D42	**D42**	**P.LP1.36**	**PANELBOARD LP1**	**SEE PANEL SCHDL.**	**SEE PANEL SCHDL.**	**120VAC**	**-**	**-**	**-**	**-**	**-**	**-**	**SEE PANEL SCHDL.**	**A / B**	**USE TYPE B IN CABLE TRAY**
-	**-**	**P.UIT.T5**	**ATG POWER TERMINAL BOX**	**TANK 5 - ATG**	**TANK 5 - ATG**	**120VAC**	**-**	**-**	**-**	**-**	**-**	**-**	**3/C #12**	**B**	**IN CABLE TRAY**
-	**-**	**P.UIT.T6**	**ATG POWER TERMINAL BOX**	**TANK 6 - ATG**	**TANK 6 - ATG**	**120VAC**	**-**	**-**	**-**	**-**	**-**	**-**	**3/C #12**	**B**	**IN CABLE TRAY**
-	**-**	**P.UIT.T7**	**ATG POWER TERMINAL BOX**	**TANK 7 - ATG**	**TANK 7 - ATG**	**120VAC**	**-**	**-**	**-**	**-**	**-**	**-**	**3/C #12**	**B**	**IN CABLE TRAY**
NETWORK ARCHITECTURE															
Z4	Z4	IC.FSC.AFS	HH-5	PDC - AIRSIDE EFSO CONNECTION	COMMUNICATION TO AIRSIDE - EFSO CABINETS	EOF						1	**6-STRAND**	**H**	
K2	K2	IC.FSC.FSHMI	FUEL SYSTEM CONTROL PNL (PLC-1)	CONTROL ROOM - OPS BUILDING	CONTROL ROOM DATA CONNECTION	EOC						1	(1) CAT 6	C	
K2	**K2**	**IC.FSC.FSHMI**	**FUEL SYSTEM CONTROL PNL (PLC-1)**	**CONTROL ROOM - NEW OPS BUILDING**	**CONTROL ROOM DATA CONNECTION**	**EOC**						**1**	**(1) CAT 6**	**C**	
K2	K2	IC.FSC.EFSOHMI	FUEL SYSTEM CONTROL PNL (PLC-1)	CONTROL ROOM - OPS BUILDING	CONTROL ROOM DATA CONNECTION	EOC						1	(1) CAT 6	C	
K2	**K2**	**IC.FSC.EFSOHMI**	**FUEL SYSTEM CONTROL PNL (PLC-1)**	**CONTROL ROOM - NEW OPS BUILDING**	**CONTROL ROOM DATA CONNECTION**	**EOC**						**1**	**(1) CAT 6**	**C**	
K2	K2	IC.FSC.PR	FUEL SYSTEM CONTROL PNL (PLC-1)	CONTROL ROOM - OPS BUILDING	CONTROL ROOM DATA CONNECTION	EOC						1	(1) CAT 6	C	
K2	**K2**	**IC.FSC.PR**	**FUEL SYSTEM CONTROL PNL (PLC-1)**	**CONTROL ROOM - NEW OPS BUILDING**	**CONTROL ROOM DATA CONNECTION**	**EOC**						**1**	**(1) CAT 6**	**C**	
-	**-**	**IC.INTERNET.OPS**	**INTERNET PROVIDER**	**IT ROOM - NEW OPS BUILDING**	**SITE INTERNET CONNECTION**	**EOF**						**1**	**12-STRAND**	**-**	**PROVIDED BY INERNET PROVIDER**
K4	**K4**	**IC.INTERNET.PDC**	**IT ROOM - NEW OPS BUILDING**	**PDC - INTERNET DROP**	**PDC INTERNET CONNECTION**	**EOF**						**1**	**12-STRAND**	**H**	
F8, E2	F8	IC.FSC.TEMP	FUEL SYSTEM CONTROL PNL (PLC-1)	EXISTING MOTOR CONTROL ROOM	DATA CONNECTION DURING TRANSITION	EOC						1	(1) CAT 6	C	
F28, G20, J7	F28	IC.FSC.WTG	FUEL SYSTEM CONTROL PNL (PLC-1)	WIRELESS GATEWAY EXISTING	TANK INSTRUMENTS	EOC						1	(1) CAT 6	C	
-	-	IC.FSC.PM	FUEL SYSTEM CONTROL PNL (PLC-1)	SWITCHGEAR, SWGR-1	METER DATA CONNECTION	EOC						1	(1) CAT 6	C	
F9, E3	F9	IC.FSC.AFS	FUEL SYSTEM CONTROL PNL (PLC-1)	AIRPORT FIRE STATION	ALARM COMMUNICATION TO FIRE STATION	EOF						1	6-STRAND	H	
D6	D6	**IC.FSC.ATG**	**FUEL SYSTEM CONTROL PNL (PLC-1)**	**ATG COMMUNICATION TERMINAL BOX**	**COMMUNICATION TO TANK ATG**	**FIELDBUS**						**1**	**(1) TSP #18**	**D**	
-	-	**IC.UIT.T5**	**ATG COMMUNICATION TERMINAL BOX**	**TANK UIT**	**COMMUNICATION TO TANK UIT**	**FIELDBUS**						**1**	**(1) TSP #18**	**D**	
-	-	**IC.UIT.T6**	**ATG COMMUNICATION TERMINAL BOX**	**TANK UIT**	**COMMUNICATION TO TANK UIT**	**FIELDBUS**						**1**	**(1) TSP #18**	**D**	
-	-	**IC.UIT.T7**	**ATG COMMUNICATION TERMINAL BOX**	**TANK UIT**	**COMMUNICATION TO TANK UIT**	**FIELDBUS**						**1**	**(1) TSP #18**	**D**	
ATG															
-	-	**IS.TT.T5**	**TT-T5**	**LT-T5**	**ATG DATA - TEMP XMTR**	**FIELDBUS**	-	-	-	-	-	1	**(1) TSP #16**	**E**	
-	-	**IS.LT.T5**	**LT-T5**	**UIT-T5**	**ATG DATA - LEVEL XMTR**	**FIELDBUS**	-	-	-	-	-	1	**(1) TSP #16**	**E**	
-	-	**IC.PT.T5**	**PT-T5**	**UIT-T5**	**ATG DATA - PRESSURE XMTR**	**4-20 mA**	-	-	-	-	-	1	**(1) TSP #16**	**E**	
-	-	**IS.TT.T6**	**TT-T6**	**LT-T6**	**ATG DATA - TEMP XMTR**	**FIELDBUS**	-	-	-	-	-	1	**(1) TSP #16**	**E**	
-	-	**IS.LT.T6**	**LT-T6**	**near sp**	**ATG DATA - LEVEL XMTR**	**FIELDBUS**	-	-	-	-	-	1	**(1) TSP #16**	**E**	
-	-	**IC.PT.T6**	**PT-T6**	**UIT-T6**	**ATG DATA - PRESSURE XMTR**	**4-20 mA**	-	-	-	-	-	1	**(1) TSP #16**	**E**	
-	-	**IS.TT.T7**	**TT-T7**	**LT-T7**	**ATG DATA - TEMP XMTR**	**FIELDBUS**	-	-	-	-	-	1	**(1) TSP #16**	**E**	
-	-	**IS.LT.T7**	**LT-T7**	**UIT-T7**	**ATG DATA - LEVEL XMTR**	**FIELDBUS**	-	-	-	-	-	1	**(1) TSP #16**	**E**	
-	-	**IC.PT.T7**	**PT-T7**	**UIT-T6**	**ATG DATA - PRESSURE XMTR**	**4-20 mA**	-	-	-	-	-	1	**(1) TSP #16**	**E**	

NOTES:

1. CIRCUIT FOUND WITHIN CIRCUITS I.FSC.CJB1.3 AND I.FSC.CJB1.4.
2. CIRCUIT FOUND WITHIN CIRCUITS C.FSC.CJB1.1 AND C.FSC.CJB1.2.
3. DIRECT BURIED TO GENERATOR.
4. DIRECT BURIED TO EXTERIOR LIGHT POLE.

12/20/2023

REGISTERED PROFESSIONAL ENGINEER 100084PE OREGON JULY 12, 2022 TIMOTHY RENSHAW

EXPIRES: 12/31/2024

no.	date	by	ckd	description
A	12/21/23	TSR	BAW	ISSUED FOR PERMIT

ISSUED FOR PERMIT ONLY

BURNS McDONNELL
9400 WARD PARKWAY
KANSAS CITY, MO 64114
816-333-9400
Burns & McDonnell Engineering Co, Inc.

date 04/24/2023 | detailed S. JESBERG
designed T. RENSHAW | checked B. WINTER

PDX FUEL COMPANY L.L.C

PORTLAND INTERNATIONAL AIRPORT
5000 NE MARINE DR.
PORTLAND, OREGON 97218

PDX FACILITY IMPROVEMENTS
CABLE SCHEDULE - 4

project 153929 | contract
drawing **E-706** | rev. **A**

file 153929E-706.dwg

CONTROL CIRCUIT SCHEDULE

DUCTBANK SECTION(S)	PDC STUB UP	CONTROL CIRCUIT SCHEDULE	FROM	TO	PURPOSE	SIGNAL	PLC I/O DI	PLC I/O DO	PLC I/O AI	PLC I/O AO	PLC I/O PULSE	PLC I/O COMM	CONDUCTORS QUANTITY AND SIZE	CONDUCTORS TYPE	NOTES
MISCELLANEOUS															
AOA CABINET															
Z36	Z36	IC.AOA.FIBER	HH-6	AOA CABINET	AOA SECURITY FIBER	**EOF**						**1**	**12-STRAND**	**-**	
SECURITY															
-	-	IC.EC01.ICCR	ENCLOSURE CABINET 01	INTERCOM AND CARD READER	INTERCOM AND CARD READER								VENDOR FURNISHED		FURNISHED WITH CARD READER EQUIPMENT
-	-	IC.EC01.CT01	ENCLOSURE CABINET 01	CAMERA 01	CAMERA 01	EOC							(1) CAT 6A		COPPER WIRE
-	-	IC.EC01.CR	ENCLOSURE CABINET 01	CARD READER (MAIN GATE)	CARD READER (MAIN GATE)								VENDOR FURNISHED		FURNISHED WITH CARD READER EQUIPMENT
-	-	IC.EC01.CR	ENCLOSURE CABINET 01	CARD READER (AOA GATE)	CARD READER (AOA GATE)								VENDOR FURNISHED		FURNISHED WITH CARD READER EQUIPMENT
-	-	IC.EC01.GC	ENCLOSURE CABINET 01	GATE CONTROLLER	GATE CONTROLLER								VENDOR FURNISHED		FURNISHED WITH GATE CONTROLLER EQUIPMENT
-	-	IC.EC01.LDGC	ENCLOSURE CABINET 01	LANE DETECTOR AND GATE CONTROLLER	LANE DETECTOR AND GATE CONTROLLER								VENDOR FURNISHED		FURNISHED WITH GATE CONTROLLER EQUIPMENT
		IC.EC02.CT02	ENCLOSURE CABINET 02	CAMERA 02	CAMERA 02	EOC							(1) CAT 6A		COPPER WIRE
		IC.EC02.CT03	ENCLOSURE CABINET 02	CAMERA 03	CAMERA 03	EOC							(1) CAT 6A		COPPER WIRE
-	-	IC.EC02.CT04	ENCLOSURE CABINET 02	CAMERA 04	CAMERA 04	EOC							(1) CAT 6A		COPPER WIRE
R7, S4	-	IC.EC02.CT22	ENCLOSURE CABINET 02	CAMERA 22	CAMERA 22	EOC							(1) CAT 6A		COPPER WIRE
R7, S4	-	IC.EC02.CT23	ENCLOSURE CABINET 02	CAMERA 23	CAMERA 23	EOC							(1) CAT 6A		COPPER WIRE
-	-	IC.EC03.CT05	ENCLOSURE CABINET 03	CAMERA 05	CAMERA 05	EOC							(1) CAT 6A		COPPER WIRE
-	-	IC.EC03.CT06	ENCLOSURE CABINET 03	CAMERA 06	CAMERA 06	EOC							(1) CAT 6A		COPPER WIRE
-	-	IC.EC03.CT07	ENCLOSURE CABINET 03	CAMERA 07	CAMERA 07	EOC							(1) CAT 6A		COPPER WIRE
-	-	IC.EC03.CT08	ENCLOSURE CABINET 03	CAMERA 08	CAMERA 08	EOC							(1) CAT 6A		COPPER WIRE
-	-	IC.EC03.CT09	ENCLOSURE CABINET 03	CAMERA 09	CAMERA 09	EOC							(1) CAT 6A		COPPER WIRE
-	-	IC.EC03.CT10	ENCLOSURE CABINET 03	CAMERA 10	CAMERA 10	EOC							(1) CAT 6A		COPPER WIRE
-	-	IC.EC04.CT11	ENCLOSURE CABINET 04	CAMERA 11	CAMERA 11	EOC							(1) CAT 6A		COPPER WIRE
-	-	IC.EC04.CT12	ENCLOSURE CABINET 04	CAMERA 12	CAMERA 12	EOC							(1) CAT 6A		COPPER WIRE
-	-	IC.EC04.CT13	ENCLOSURE CABINET 04	CAMERA 13	CAMERA 13	EOC							(1) CAT 6A		COPPER WIRE
-	-	IC.EC04.CT14	ENCLOSURE CABINET 04	CAMERA 14	CAMERA 14	EOC							(1) CAT 6A		COPPER WIRE
-	-	IC.EC05.CT15	ENCLOSURE CABINET 05	CAMERA 15	CAMERA 15	EOC							(1) CAT 6A		COPPER WIRE
-	-	IC.EC05.CT16	ENCLOSURE CABINET 05	CAMERA 16	CAMERA 16	EOC							(1) CAT 6A		COPPER WIRE
-	-	IC.EC05.CT17	ENCLOSURE CABINET 05	CAMERA 17	CAMERA 17	EOC							(1) CAT 6A		COPPER WIRE
-	-	IC.EC05.CT18	ENCLOSURE CABINET 05	CAMERA 18	CAMERA 18	EOC							(1) CAT 6A		COPPER WIRE
-	-	IC.EC06.CT19	ENCLOSURE CABINET 06	CAMERA 19	CAMERA 19	EOC							(1) CAT 6A		COPPER WIRE
-	-	IC.EC06.CT20	ENCLOSURE CABINET 06	CAMERA 20	CAMERA 20	EOC							(1) CAT 6A		COPPER WIRE
-	-	IC.OPS.CT21	OPERATIONS BUILDING	CAMERA 21	CAMERA 21	EOC							(1) CAT 6A		COPPER WIRE
OPERATIONS BUILDING															
IT. ROOM 106															
M2, N2	-	IC.OPS.EC01	OPERATIONS BUILDING	ENCLOSURE CABINET 01	SECURITY FIBER	EOF							24-STRAND	H	
Y1, T36, Q8, S1	-	IC.OPS.EC02	OPERATIONS BUILDING	ENCLOSURE CABINET 02	SECURITY FIBER	EOF							24-STRAND	H	
Y1, T36, Q8, S1, X1	-	IC.OPS.EC03	OPERATIONS BUILDING	ENCLOSURE CABINET 03	SECURITY FIBER	EOF							24-STRAND	H	
Y1, T36, Q8, S1, X1	-	IC.OPS.EC04	OPERATIONS BUILDING	ENCLOSURE CABINET 04	SECURITY FIBER	EOF							24-STRAND	H	
Y1, T36, Q8, S1, X1	-	IC.OPS.EC05	OPERATIONS BUILDING	ENCLOSURE CABINET 05	SECURITY FIBER	EOF							24-STRAND	H	
Y1, T36, Q8, S1, X1	-	IC.OPS.EC06	OPERATIONS BUILDING	ENCLOSURE CABINET 06	SECURITY FIBER	EOF							24-STRAND	H	
MECH. ROOM 102															
N3, M3	-	**P.PNLA2.57**	**PANELBOARD A2**	**WEST GATE MOTOR OPERATOR (1 HP)**	**POWER TO GATE OPERATOR**	**208VAC**	**-**	**-**	**-**	**-**	**-**	**-**	**3-#10 + #10 GND**	**A**	
N3, M3	-	**P.PNLA2.69**	**PANELBOARD A2**	**AOA GATE MOTOR OPERATOR (1 HP)**	**POWER TO GATE OPERATOR**	**208VAC**	**-**	**-**	**-**	**-**	**-**	**-**	**3-#10 + #10 GND**	**A**	
Y2,Q26, S2, X2	-	**P.PNLA2.75**	**PANELBOARD A2**	**SECURITY CABINET (EC02, EC03, EC06)**	**POWER TO SECURITY CABINET**	**120VAC**	**-**	**-**	**-**	**-**	**-**	**-**	**3-#12 + #12 GND**	**A**	
Y2,Q26, S2, X2	-	**P.PNLA2.77**	**PANELBOARD A2**	**SECURITY CABINET (EC04, EC05)**	**POWER TO SECURITY CABINET**	**120VAC**	**-**	**-**	**-**	**-**	**-**	**-**	**3-#12 + #12 GND**	**A**	
N5, M5	-	**P.PNLA2.79**	**PANELBOARD A2**	**SECURITY CABINET (EC01)**	**POWER TO SECURITY CABINET**	**120VAC**	**-**	**-**	**-**	**-**	**-**	**-**	**3-#12 + #12 GND**	**A**	
M1, P1/N1	-	**P.PNLH1.XX**	**PANELBOARD H1**	**AREA LIGHTS / PARKING LIGHTS**	**POWER TO LIGHTS**	**480VAC**	**-**	**-**	**-**	**-**	**-**	**-**	**2-#10 + #10 GND**	**A**	
HYDRANT MAIN AND BYPASS, INCOMING FILTRATION															
HYDRANT MAIN LINE															
F17, G9, J3	NOTE 1	I.PT.MAIN1	FUEL SYSTEM CONTROL PNL (PLC-1)	PRESSURE TRANSMITTER MAIN #1 (PT-MAIN1)	4-20MA SIGNAL (DEVICE LOOP POWERED)	4-20mA			1				(1) TSP #16	E	LOOP POWERED
F17, G9, J3	NOTE 1	I.PT.MAIN2	FUEL SYSTEM CONTROL PNL (PLC-1)	PRESSURE TRANSMITTER MAIN #2 (PT-MAIN2)	4-20MA SIGNAL (DEVICE LOOP POWERED)	4-20mA			1				(1) TSP #16	E	LOOP POWERED
F17, G9, J3	NOTE 1	I.PT.MAIN3	FUEL SYSTEM CONTROL PNL (PLC-1)	PRESSURE TRANSMITTER MAIN #3 (PT-MAIN3)	4-20MA SIGNAL (DEVICE LOOP POWERED)	4-20mA			1				(1) TSP #16	E	LOOP POWERED
RECIRC LINE															
F16, G8, J2	NOTE 2	C.JY.RCL1.1	FUEL SYSTEM CONTROL PNL (PLC-1)	RECIRC FLOW CONTROL VALVE 1	FLOW CONTROL VALVE	120VAC		1					3/C #14	B	
F16, G8, J2	NOTE 2	C.JY.RCL1.2	FUEL SYSTEM CONTROL PNL (PLC-1)	RECIRC FLOW CONTROL VALVE 1	FLOW CONTROL VALVE	120VAC		1					3/C #14	B	
F16, G8, J2	NOTE 2	C.JY.RCL1.3	FUEL SYSTEM CONTROL PNL (PLC-1)	RECIRC FLOW CONTROL VALVE 1	FLOW CONTROL VALVE	120VAC		1					3/C #14	B	SPARE FOR FUTURE AUTOMATIC BYPASS
F17, G9, J3	F17	P.FE.RCL1	FUEL SYSTEM CONTROL PNL (PLC-1)	RECIRC FLOW METER 1 (FE-RCL1)	METER POWER	24VDC							3/C #14	B	ULTRASONIC METER - POWER
F17, G9, J3	NOTE 1	I.FE.RCL1	FUEL SYSTEM CONTROL PNL (PLC-1)	RECIRC FLOW METER 1 (FE-RCL1)	4-20MA SIGNAL	4-20mA			1				(1) TSP #16	E	ULTRASONIC METER - SIGNAL
F16, G8, J2	NOTE 2	C.JY.RCL2.1	FUEL SYSTEM CONTROL PNL (PLC-1)	RECIRC FLOW CONTROL VALVE 2	FLOW CONTROL VALVE	120VAC		1					3/C #14	B	
F16, G8, J2	NOTE 2	C.JY.RCL2.2	FUEL SYSTEM CONTROL PNL (PLC-1)	RECIRC FLOW CONTROL VALVE 1	FLOW CONTROL VALVE	120VAC		1					3/C #14	B	
F16, G8, J2	NOTE 2	C.JY.RCL2.3	FUEL SYSTEM CONTROL PNL (PLC-1)	RECIRC FLOW CONTROL VALVE 1	FLOW CONTROL VALVE	120VAC		1					3/C #14	B	SPARE FOR FUTURE AUTOMATIC BYPASS
INCOMING FILTRATION															
F16, G8, J2	NOTE 2	C.AE.FS6	FUEL SYSTEM CONTROL PNL (PLC-1)	MOISTURE SENSOR (ME-FS6)	MOISTURE SENSOR (ME-FS6)	120VAC	1						2/C #14	B	
F17, G9, J3	NOTE 1	I.DPT.FS6	FUEL SYSTEM CONTROL PNL (PLC-1)	DIFFERENTIAL PRESSURE TRANSMITTER (DPT-FS6)	DIFFERENTIAL PRESSURE TRANSMITTER (DPT-FS6)	4-20mA			1				(1) TSP #16	E	LOOP POWERED
F17, G9, J3	NOTE 1	I.DPT.CF1	FUEL SYSTEM CONTROL PNL (PLC-1)	DIFFERENTIAL PRESSURE TRANSMITTER (DPT-CF6)	DIFFERENTIAL PRESSURE TRANSMITTER (DPT-CF6)	4-20mA			1				(1) TSP #16	E	LOOP POWERED
F17, G9, J3	NOTE 1	I.DPT.PF1	FUEL SYSTEM CONTROL PNL (PLC-1)	DIFFERENTIAL PRESSURE TRANSMITTER (DPT-PF6)	DIFFERENTIAL PRESSURE TRANSMITTER (DPT-PF6)	4-20mA			1				(1) TSP #16	E	LOOP POWERED
TRANSFER PUMP 2															
-	-	C.FSC.TP2	MOTOR CONTROL CENTER (MCC-1)	FUEL SYSTEM CONTROL PNL (PLC-1)	FLOW STATUS, RUN STATUS, PLC RUN/STOP	120VAC	2	1					6/C #14	B	
F22, G14, I9	F22	C.HS.TP2.1	MOTOR CONTROL CENTER (MCC-1)	HAND STATION (HS1-TP2)	RUN STOP CONTROL (IN HAND)	120VAC							3/C #14	B	
F3, E1	F3	C.HS.TP2.2	MOTOR CONTROL CENTER (MCC-1)	HAND STATION (HS2-TP2)	RUN STOP CONTROL (IN HAND)	120VAC	-	-	-	-	-	-	3/C #14	B	
F22, G14, I9	F22	C.FS.TP2	MOTOR CONTROL CENTER (MCC-1)	FLOW SWITCH (FS-TP2)	CONTROL SWITCH FS-TP2 POWER/STATUS	120VAC							3/C #14	B	
F22, G14, I9	F22	C.JY.TP2	MOTOR CONTROL CENTER (MCC-1)	FLOW CONTROL VALVE (FC-TP2)	FLOW CONTROL VALVE	120VAC		0					3/C #14	B	
F22, G14, I9	F22	C.MWTS.TP2	MOTOR CONTROL CENTER (MCC-1)	MOTOR WINDING TEMPERATURE SWITCH, TP-2	MOTOR WINDING TEMPERATURE SWITCH, TP-2	120VAC							2/C #14	B	
F22, G14, I9	F22	C.HTR.TP2	MOTOR CONTROL CENTER (MCC-1)	MOTOR HEATER, TP-2	MOTOR HEATER, TP-2	120VAC							3/C #14	B	
F20, E4	F20	C.FSC.SG	FUEL SYSTEM CONTROL PNL (PLC-1)	SCULLY GROUND	SCULLY GROUND AT SLOP TANK	120VAC	1						2/C #14	B	
-	-	C.EFSO.TP2	MOTOR CONTROL CENTER (MCC-1)	EFSO PANEL	EFSO SHUTDOWN	120VAC							2/C #14	B	

NOTES:

1. CIRCUIT FOUND WITHIN CIRCUITS I.FSC.CJB1.3 AND I.FSC.CJB1.4.
2. CIRCUIT FOUND WITHIN CIRCUITS C.FSC.CJB1.1 AND C.FSC.CJB1.2.
3. DIRECT BURIED TO GENERATOR.
4. DIRECT BURIED TO EXTERIOR LIGHT POLE.

12/20/2023

REGISTERED PROFESSIONAL ENGINEER 100084PE OREGON JULY 12, 2022 TIMOTHY RENSHAW

EXPIRES: 12/31/2024

no.	date	by	ckd	description
A	12/21/23	TSR	BAW	ISSUED FOR PERMIT

ISSUED FOR PERMIT ONLY

BURNS McDONNELL
9400 WARD PARKWAY
KANSAS CITY, MO 64114
816-333-9400
Burns & McDonnell Engineering Co, Inc.

date	detailed
04/24/2023	S. JESBERG
designed	checked
T. RENSHAW	B. WINTER

PDX FUEL COMPANY L.L.C

PORTLAND INTERNATIONAL AIRPORT
5000 NE MARINE DR.
PORTLAND, OREGON 97218

PDX FACILITY IMPROVEMENTS
CABLE SCHEDULE - 5

project	contract
153929	

drawing **E-707** rev. **A**

file 153929E-707.dwg

CONTROL CIRCUIT SCHEDULE

DUCTBANK SECTION(S)	PDC STUB UP	CONTROL CIRCUIT SCHEDULE	FROM	TO	PURPOSE	SIGNAL	PLC I/O DI	PLC I/O DO	PLC I/O AI	PLC I/O AO	PLC I/O PULSE	PLC I/O COMM	CONDUCTORS QUANTITY AND SIZE	CONDUCTORS TYPE	NOTES
HYDRANT PUMP PAD															
HYDRANT PUMP TRAIN 1															
F18, G10, J4	F18	C.ME.HFS1	CONTROL JUNCTION BOX #1	MOISTURE SWITCH (ME-HFS1)	PWR / CNTRL TO MOISTURE SWITCH (ME-HFS1)	120VAC							4/C #14	B	
-	-	IS.ME.HFS1	MOISTURE SWITCH	MOISTURE SENSOR	MOISTURE SENSOR TO MOISTURE CONTROLLER	I.S.							VENDOR FURNISHED	-	
F18, G10, J4	F18	C.JY.HP1	CONTROL JUNCTION BOX #1	WATER SLUG VALVE SOLENOID (JY-HP1)	WATER SLUG VALVE SOLENOID (JY-HP1)	120VAC							3/C #14	B	
F18, G10, J4	F18	C.FSTS.HP1	CONTROL JUNCTION BOX #1	FLOW & TEMPERATURE SWITCHES (FSTS-HP1)	FLOW & TEMPERATURE SWITCHES (FSTS-HP1)	120VAC							7/C #14	B	
F11, G3, I3	F11	C.MWTS. HP1	CONTROL JUNCTION BOX #1	MOTOR WINDING TEMPERATURE SWITCH, HP-1	MOTOR WINDING TEMPERATURE SWITCH, HP-1	120VAC							2/C #14	B	
F30, G11, H1	F30	C.HS.HP1.1	CONTROL JUNCTION BOX #1	HAND STATION (HS-HP1)	RUN STOP CONTROL (IN HAND)	120VAC							3/C #14	B	
F30, G11, H1	F30	C.HS.HP1.2	CONTROL JUNCTION BOX #1	HAND STATION (HS-HP1)	FIELD RUN INDICATION LIGHT	24VDC							2/C #14	B	
F11, G3, I3	F11	C.HTR.HP1	CONTROL JUNCTION BOX #1	MOTOR HEATER, HP-1	MOTOR HEATER, HP-1	120VAC							3/C #14	B	
-	-	C.EFSO.HP1	VARIABLE FREQUENCY DRIVE, VFD-HP1	EFSO PANEL	EFSO INTERLOCK, HP-1	120VAC							2/C #14	B	
-	-	IC.FSC.VFD1	VARIABLE FREQUENCY DRIVE, VFD-HP1	FUEL SYSTEM CONTROL PNL (PLC-1)	VFD COMMUNICATIONS, HP-1	EOC						1	(1) CAT 6	C	
F17, G9, J3	NOTE 1	I.FE.HP1	CONTROL JUNCTION BOX #1	FLOW METER, HP-1	4-20MA SIGNAL (DEVICE LOOP POWERED)	4-20mA			1				(1) TSP #16	E	CONDITIONED DP METER - LOOP POWERED
F17, G9, J3	NOTE 1	I.DPT.HFS1	CONTROL JUNCTION BOX #1	DIFFERENTIAL PRESSURE XMTR (DPT-HFS1)	DIFFERENTIAL PRESSURE XMTR (DPT-HFS1)	4-20mA			1				(1) TSP #16	E	LOOP POWERED
-	-	C.FSC.HP1	VARIABLE FREQUENCY DRIVE, VFD-HP1	FUEL SYSTEM CONTROL PNL (PLC-1)	MOIST/FLOW/FUEL TEMP SWITCH, PLC RUN/STOP	120VAC	3	1					9/C #14	B	WITH 2 SPARE CONDUCTORS
F17, G9, J3	NOTE 1	I.TT.HP1	CONTROL JUNCTION BOX #1	MOTOR BEARING TEMPERATURE TRANSMITTER (TT-HP1)	MOTOR TEMPERATURE TRANSMITTER (TT-HP1)	4-20mA			1				(1) TSP #16	E	LOOP POWERED
F17, G9, J3	NOTE 1	I.VT.HP1.1	CONTROL JUNCTION BOX #1	MOTOR VIBRATION TRANSMITTERS (VT-HP1), SET 1	MOTOR VIBRATION TRANSMITTERS (VT-HP1)	4-20mA			1				(1) TSP #16	E	LOOP POWERED
F17, G9, J3	NOTE 1	I.VT.HP1.2	CONTROL JUNCTION BOX #1	MOTOR VIBRATION TRANSMITTERS (VT-HP1), SET 2	MOTOR VIBRATION TRANSMITTERS (VT-HP1)	4-20mA			1				(1) TSP #16	E	LOOP POWERED
HYDRANT PUMP TRAIN 2															
F18, G10, J4	F18	C.ME.HFS2	CONTROL JUNCTION BOX #1	MOISTURE SWITCH (ME-HFS2)	PWR / CNTRL TO MOISTURE SWITCH (ME-HFS2)	120VAC							4/C #14	B	
-	-	IS.ME.HFS2	MOISTURE SWITCH	MOISTURE SENSOR	MOISTURE SENSOR TO MOISTURE CONTROLLER	I.S.							VENDOR FURNISHED	-	
F18, G10, J4	F18	C.JY.HP2	CONTROL JUNCTION BOX #1	WATER SLUG VALVE SOLENOID (JY-HP2)	WATER SLUG VALVE SOLENOID (JY-HP2)	120VAC							3/C #14	B	
F18, G10, J4	F18	C.FSTS.HP2	CONTROL JUNCTION BOX #1	FLOW & TEMPERATURE SWITCHES (FSTS-HP2)	FLOW & TEMPERATURE SWITCHES (FSTS-HP2)	120VAC							7/C #14	B	
F12, G4, I4	F12	C.MWTS. HP2	CONTROL JUNCTION BOX #1	MOTOR WINDING TEMPERATURE SWITCH, HP-2	MOTOR WINDING TEMPERATURE SWITCH, HP-2	120VAC							2/C #14	B	
F30, G11, H1	F30	C.HS.HP2.1	CONTROL JUNCTION BOX #1	HAND STATION (HS-HP2)	RUN STOP CONTROL (IN HAND)	120VAC							3/C #14	B	
F30, G11, H1	F30	C.HS.HP2.2	CONTROL JUNCTION BOX #1	HAND STATION (HS-HP2)	FIELD RUN INDICATION LIGHT	24VDC							2/C #14	B	
F12, G4, I4	F12	C.HTR.HP2	CONTROL JUNCTION BOX #1	MOTOR HEATER, HP-2	MOTOR HEATER, HP-2	120VAC							3/C #14	B	
-	-	C.EFSO.HP2	VARIABLE FREQUENCY DRIVE, VFD-HP2	EFSO PANEL	EFSO INTERLOCK, HP-2	120VAC							2/C #14	B	
-	-	IC.FSC.VFD2	VARIABLE FREQUENCY DRIVE, VFD-HP2	FUEL SYSTEM CONTROL PNL (PLC-1)	VFD COMMUNICATIONS, HP-2	EOC						1	(1) CAT 6	C	
F17, G9, J3	NOTE 1	I.FE.HP2	CONTROL JUNCTION BOX #1	FLOW METER, HP-2	4-20MA SIGNAL (DEVICE LOOP POWERED)	4-20mA			1				(1) TSP #16	E	CONDITIONED DP METER - LOOP POWERED
F17, G9, J3	NOTE 1	I.DPT.HFS2	CONTROL JUNCTION BOX #1	DIFFERENTIAL PRESSURE XMTR (DPT-HFS2)	DIFFERENTIAL PRESSURE XMTR (DPT-HFS2)	4-20mA			1				(1) TSP #16	E	LOOP POWERED
-	-	C.FSC.HP2	VARIABLE FREQUENCY DRIVE, VFD-HP2	FUEL SYSTEM CONTROL PNL (PLC-1)	MOIST/FLOW/FUEL TEMP SWITCH, PLC RUN/STOP	120VAC	3	1					9/C #14	B	WITH 2 SPARE CONDUCTORS
F17, G9, J3	NOTE 1	I.TT.HP2	CONTROL JUNCTION BOX #1	MOTOR BEARING TEMPERATURE TRANSMITTER (TT-HP2)	MOTOR TEMPERATURE TRANSMITTER (TT-HP2)	4-20mA			1				(1) TSP #16	E	LOOP POWERED
F17, G9, J3	NOTE 1	I.VT.HP2.1	CONTROL JUNCTION BOX #1	MOTOR VIBRATION TRANSMITTERS (VT-HP2), SET 1	MOTOR VIBRATION TRANSMITTERS (VT-HP2)	4-20mA			1				(1) TSP #16	E	LOOP POWERED
F17, G9, J3	NOTE 1	I.VT.HP2.2	CONTROL JUNCTION BOX #1	MOTOR VIBRATION TRANSMITTERS (VT-HP2), SET 2	MOTOR VIBRATION TRANSMITTERS (VT-HP2)	4-20mA			1				(1) TSP #16	E	LOOP POWERED
HYDRANT PUMP TRAIN 3															
F18, G10, J4	F18	C.ME.HFS3	CONTROL JUNCTION BOX #1	MOISTURE SWITCH (ME-HFS3)	PWR / CNTRL TO MOISTURE SWITCH (ME-HFS3)	120VAC							4/C #14	B	
-	-	IS.ME.HFS3	MOISTURE SWITCH	MOISTURE SENSOR	MOISTURE SENSOR TO MOISTURE CONTROLLER	I.S.							VENDOR FURNISHED	-	
F18, G10, J4	F18	C.JY.HP3	CONTROL JUNCTION BOX #1	WATER SLUG VALVE SOLENOID (JY-HP3)	WATER SLUG VALVE SOLENOID (JY-HP3)	120VAC							3/C #14	B	
F18, G10, J4	F18	C.FSTS.HP3	CONTROL JUNCTION BOX #1	FLOW & TEMPERATURE SWITCHES (FSTS-HP3)	FLOW & TEMPERATURE SWITCHES (FSTS-HP3)	120VAC							7/C #14	B	
F13, G5, I5	F13	C.MWTS. HP3	CONTROL JUNCTION BOX #1	MOTOR WINDING TEMPERATURE SWITCH, HP-3	MOTOR WINDING TEMPERATURE SWITCH, HP-3	120VAC							2/C #14	B	
F30, G11, H1	F30	C.HS.HP3.1	CONTROL JUNCTION BOX #1	HAND STATION (HS-HP3)	RUN STOP CONTROL (IN HAND)	120VAC							3/C #14	B	
F30, G11, H1	F30	C.HS.HP3.2	CONTROL JUNCTION BOX #1	HAND STATION (HS-HP3)	FIELD RUN INDICATION LIGHT	24VDC							2/C #14	B	
F13, G5, I5	F13	C.HTR.HP3	CONTROL JUNCTION BOX #1	MOTOR HEATER, HP-3	MOTOR HEATER, HP-3	120VAC							3/C #14	B	
-	-	C.EFSO.HP3	VARIABLE FREQUENCY DRIVE, VFD-HP3	EFSO PANEL	EFSO INTERLOCK, HP-3	120VAC							2/C #14	B	
-	-	IC.FSC.VFD3	VARIABLE FREQUENCY DRIVE, VFD-HP3	FUEL SYSTEM CONTROL PNL (PLC-1)	VFD COMMUNICATIONS, HP-3	EOC						1	(1) CAT 6	C	
F17, G9, J3	NOTE 1	I.FE.HP3	CONTROL JUNCTION BOX #1	FLOW METER, HP-3	4-20MA SIGNAL (DEVICE LOOP POWERED)	4-20mA			1				(1) TSP #16	E	CONDITIONED DP METER - LOOP POWERED
F17, G9, J3	NOTE 1	I.DPT.HFS3	CONTROL JUNCTION BOX #1	DIFFERENTIAL PRESSURE XMTR (DPT-HFS3)	DIFFERENTIAL PRESSURE XMTR (DPT-HFS3)	4-20mA			1				(1) TSP #16	E	LOOP POWERED
-	-	C.FSC.HP3	VARIABLE FREQUENCY DRIVE, VFD-HP3	FUEL SYSTEM CONTROL PNL (PLC-1)	MOIST/FLOW/FUEL TEMP SWITCH, PLC RUN/STOP	120VAC	3	1					9/C #14	B	WITH 2 SPARE CONDUCTORS
F17, G9, J3	NOTE 1	I.TT.HP3	CONTROL JUNCTION BOX #1	MOTOR BEARING TEMPERATURE TRANSMITTER (TT-HP3)	MOTOR TEMPERATURE TRANSMITTER (TT-HP3)	4-20mA			1				(1) TSP #16	E	LOOP POWERED
F17, G9, J3	NOTE 1	I.VT.HP3.1	CONTROL JUNCTION BOX #1	MOTOR VIBRATION TRANSMITTERS (VT-HP3), SET 1	MOTOR VIBRATION TRANSMITTERS (VT-HP3)	4-20mA			1				(1) TSP #16	E	LOOP POWERED
F17, G9, J3	NOTE 1	I.VT.HP3.2	CONTROL JUNCTION BOX #1	MOTOR VIBRATION TRANSMITTERS (VT-HP3), SET 2	MOTOR VIBRATION TRANSMITTERS (VT-HP3)	4-20mA			1				(1) TSP #16	E	LOOP POWERED
HYDRANT PUMP TRAIN 4															
F18, G10, J4	F18	C.ME.HFS4	CONTROL JUNCTION BOX #1	MOISTURE SWITCH (ME-HFS4)	PWR / CNTRL TO MOISTURE SWITCH (ME-HFS4)	120VAC							4/C #14	B	
-	-	IS.ME.HFS4	MOISTURE SWITCH	MOISTURE SENSOR	MOISTURE SENSOR TO MOISTURE CONTROLLER	I.S.							VENDOR FURNISHED	-	
F18, G10, J4	F18	C.JY.HP4	CONTROL JUNCTION BOX #1	WATER SLUG VALVE SOLENOID (JY-HP4)	WATER SLUG VALVE SOLENOID (JY-HP4)	120VAC							3/C #14	B	
F18, G10, J4	F18	C.FSTS.HP4	CONTROL JUNCTION BOX #1	FLOW & TEMPERATURE SWITCHES (FSTS-HP4)	FLOW & TEMPERATURE SWITCHES (FSTS-HP4)	120VAC							7/C #14	B	
F14, G6, I6	F14	C.MWTS. HP4	CONTROL JUNCTION BOX #1	MOTOR WINDING TEMPERATURE SWITCH, HP-4	MOTOR WINDING TEMPERATURE SWITCH, HP-4	120VAC							2/C #14	B	
F30, G11, H1	F30	C.HS.HP4.1	CONTROL JUNCTION BOX #1	HAND STATION (HS-HP4)	RUN STOP CONTROL (IN HAND)	120VAC							3/C #14	B	
F30, G11, H1	F30	C.HS.HP4.2	CONTROL JUNCTION BOX #1	HAND STATION (HS-HP4)	FIELD RUN INDICATION LIGHT	24VDC							2/C #14	B	
F14, G6, I6	F14	C.HTR.HP4	CONTROL JUNCTION BOX #1	MOTOR HEATER, HP-4	MOTOR HEATER, HP-4	120VAC							3/C #14	B	
-	-	C.EFSO.HP4	VARIABLE FREQUENCY DRIVE, VFD-HP4	EFSO PANEL	EFSO INTERLOCK, HP-4	120VAC							2/C #14	B	
-	-	IC.FSC.VFD4	VARIABLE FREQUENCY DRIVE, VFD-HP4	FUEL SYSTEM CONTROL PNL (PLC-1)	VFD COMMUNICATIONS, HP-4	EOC						1	(1) CAT 6	C	
F17, G9, J3	NOTE 1	I.FE.HP4	CONTROL JUNCTION BOX #1	FLOW METER, HP-4	4-20MA SIGNAL (DEVICE LOOP POWERED)	4-20mA			1				(1) TSP #16	E	CONDITIONED DP METER - LOOP POWERED
F17, G9, J3	NOTE 1	I.DPT.HFS4	CONTROL JUNCTION BOX #1	DIFFERENTIAL PRESSURE XMTR (DPT-HFS4)	DIFFERENTIAL PRESSURE XMTR (DPT-HFS4)	4-20mA			1				(1) TSP #16	E	LOOP POWERED
-	-	C.FSC.HP4	VARIABLE FREQUENCY DRIVE, VFD-HP4	FUEL SYSTEM CONTROL PNL (PLC-1)	MOIST/FLOW/FUEL TEMP SWITCH, PLC RUN/STOP	120VAC	3	1					9/C #14	B	WITH 2 SPARE CONDUCTORS
F17, G9, J3	NOTE 1	I.TT.HP4	CONTROL JUNCTION BOX #1	MOTOR BEARING TEMPERATURE TRANSMITTER (TT-HP4)	MOTOR TEMPERATURE TRANSMITTER (TT-HP4)	4-20mA			1				(1) TSP #16	E	LOOP POWERED
F17, G9, J3	NOTE 1	I.VT.HP4.1	CONTROL JUNCTION BOX #1	MOTOR VIBRATION TRANSMITTERS (VT-HP4), SET 1	MOTOR VIBRATION TRANSMITTERS (VT-HP4)	4-20mA			1				(1) TSP #16	E	LOOP POWERED
F17, G9, J3	NOTE 1	I.VT.HP4.2	CONTROL JUNCTION BOX #1	MOTOR VIBRATION TRANSMITTERS (VT-HP4), SET 2	MOTOR VIBRATION TRANSMITTERS (VT-HP4)	4-20mA			1				(1) TSP #16	E	LOOP POWERED
HYDRANT PUMP TRAIN 5															
F18, G10, J4	F18	C.ME.HFS5	CONTROL JUNCTION BOX #1	MOISTURE SWITCH (ME-HFS5)	PWR / CNTRL TO MOISTURE SWITCH (ME-HFS5)	120VAC							4/C #14	B	
-	-	IS.ME.HFS5	MOISTURE SWITCH	MOISTURE SENSOR	MOISTURE SENSOR TO MOISTURE CONTROLLER	I.S.							VENDOR FURNISHED	-	
F18, G10, J4	F18	C.JY.HP5	CONTROL JUNCTION BOX #1	WATER SLUG VALVE SOLENOID (JY-HP5)	WATER SLUG VALVE SOLENOID (JY-HP5)	120VAC							3/C #14	B	
F18, G10, J4	F18	C.FSTS.HP5	CONTROL JUNCTION BOX #1	FLOW & TEMPERATURE SWITCHES (FSTS-HP5)	FLOW & TEMPERATURE SWITCHES (FSTS-HP5)	120VAC							7/C #14	B	
F23, G15, I10	F23	C.MWTS. HP5	CONTROL JUNCTION BOX #1	MOTOR WINDING TEMPERATURE SWITCH, HP-5	MOTOR WINDING TEMPERATURE SWITCH, HP-5	120VAC							2/C #14	B	
F30, G11, H1	F30	C.HS.HP5.1	CONTROL JUNCTION BOX #1	HAND STATION (HS-HP5)	RUN STOP CONTROL (IN HAND)	120VAC							3/C #14	B	
F30, G11, H1	F30	C.HS.HP5.2	CONTROL JUNCTION BOX #1	HAND STATION (HS-HP5)	FIELD RUN INDICATION LIGHT	24VDC							2/C #14	B	
F23, G15, I10	F23	C.HTR.HP5	CONTROL JUNCTION BOX #1	MOTOR HEATER, HP-5	MOTOR HEATER, HP-5	120VAC							3/C #14	B	
-	-	C.EFSO.HP5	VARIABLE FREQUENCY DRIVE, VFD-HP5	EFSO PANEL	EFSO INTERLOCK, HP-5	120VAC							2/C #14	B	
-	-	IC.FSC.VFD5	VARIABLE FREQUENCY DRIVE, VFD-HP5	FUEL SYSTEM CONTROL PNL (PLC-1)	VFD COMMUNICATIONS, HP-5	EOC						1	(1) CAT 6	C	
F17, G9, J3	NOTE 1	I.FE.HP5	CONTROL JUNCTION BOX #1	FLOW METER, HP-5	4-20MA SIGNAL (DEVICE LOOP POWERED)	4-20mA			1				(1) TSP #16	E	CONDITIONED DP METER - LOOP POWERED
F17, G9, J3	NOTE 1	I.DPT.HFS5	CONTROL JUNCTION BOX #1	DIFFERENTIAL PRESSURE XMTR (DPT-HFS5)	DIFFERENTIAL PRESSURE XMTR (DPT-HFS5)	4-20mA			1				(1) TSP #16	E	LOOP POWERED
-	-	C.FSC.HP5	VARIABLE FREQUENCY DRIVE, VFD-HP5	FUEL SYSTEM CONTROL PNL (PLC-1)	MOIST/FLOW/FUEL TEMP SWITCH, PLC RUN/STOP	120VAC	3	1					9/C #14	B	WITH 2 SPARE CONDUCTORS
F17, G9, J3	NOTE 1	I.TT.HP5	CONTROL JUNCTION BOX #1	MOTOR BEARING TEMPERATURE TRANSMITTER (TT-HP5)	MOTOR TEMPERATURE TRANSMITTER (TT-HP5)	4-20mA			1				(1) TSP #16	E	LOOP POWERED
F17, G9, J3	NOTE 1	I.VT.HP5.1	CONTROL JUNCTION BOX #1	MOTOR VIBRATION TRANSMITTERS (VT-HP5), SET 1	MOTOR VIBRATION TRANSMITTERS (VT-HP5)	4-20mA			1				(1) TSP #16	E	LOOP POWERED
F17, G9, J3	NOTE 1	I.VT.HP5.2	CONTROL JUNCTION BOX #1	MOTOR VIBRATION TRANSMITTERS (VT-HP5), SET 2	MOTOR VIBRATION TRANSMITTERS (VT-HP5)	4-20mA			1				(1) TSP #16	E	LOOP POWERED

NOTES:

1. CIRCUIT FOUND WITHIN CIRCUITS I.FSC.CJB1.3 AND I.FSC.CJB1.4.
2. CIRCUIT FOUND WITHIN CIRCUITS C.FSC.CJB1.1 AND C.FSC.CJB1.2.
3. DIRECT BURIED TO GENERATOR.
4. DIRECT BURIED TO EXTERIOR LIGHT POLE.

12/20/2023

REGISTERED PROFESSIONAL ENGINEER 10006APE OREGON JULY 12, 2001 TIMOTHY RENSHAW
EXPIRES: 12/31/2024

no.	date	by	ckd	description
A	12/21/23	TSR	BAW	ISSUED FOR PERMIT

ISSUED FOR PERMIT ONLY

BURNS McDONNELL
9400 WARD PARKWAY
KANSAS CITY, MO 64114
816-333-9400
Burns & McDonnell Engineering Co, Inc.

date 04/24/2023 | detailed S. JESBERG
designed T. RENSHAW | checked B. WINTER

PDX FUEL COMPANY L.L.C

PORTLAND INTERNATIONAL AIRPORT
5000 NE MARINE DR.
PORTLAND, OREGON 97218

PDX FACILITY IMPROVEMENTS
CABLE SCHEDULE - 6

project 153929 | contract
drawing **E-708** | rev. **A**

file 153929E-708.dwg

CONTROL CIRCUIT SCHEDULE

DUCTBANK SECTION(S)	PDC STUB UP	CONTROL CIRCUIT SCHEDULE	FROM	TO	PURPOSE	SIGNAL	PLC I/O DI	PLC I/O DO	PLC I/O AI	PLC I/O AO	PLC I/O PULSE	PLC I/O COMM	CONDUCTORS QUANTITY AND SIZE	CONDUCTORS TYPE	NOTES
GENERATOR/ATS 1&2															
C6	C6	C.ATS1.GEN	STANDYBY GENERATOR	AUTOMATIC TRANSFER SWITCH, ATS-1	ATS-1 GENERATOR RUN COMMAND	24VDC							2/C #14	B	
C6	C6	C.ATS2.GEN	STANDYBY GENERATOR	AUTOMATIC TRANSFER SWITCH, ATS-2	ATS-2 GENERATOR RUN COMMAND	24VDC							2/C #14	B	
-	-	C.FSC.ATS1	AUTOMATIC TRANSFER SWITCH, ATS-1	FUEL SYSTEM CONTROL PNL (PLC-1)	AUTOMATIC TRANSFER SWITCH, ATS-1	120VAC	1						2/C #14	B	
-	-	C.FSC.ATS2	AUTOMATIC TRANSFER SWITCH, ATS-2	FUEL SYSTEM CONTROL PNL (PLC-1)	AUTOMATIC TRANSFER SWITCH, ATS-2	120VAC	1						2/C #14	B	
-	-	IC.FSC.ATS1	AUTOMATIC TRANSFER SWITCH, ATS-1	FUEL SYSTEM CONTROL PNL (PLC-1)	AUTOMATIC TRANSFER SWITCH, ATS-1	EOC						1	(1) CAT 6	C	
-	-	IC.FSC.ATS2	AUTOMATIC TRANSFER SWITCH, ATS-2	FUEL SYSTEM CONTROL PNL (PLC-1)	AUTOMATIC TRANSFER SWITCH, ATS-2	EOC						1	(1) CAT 6	C	
C12, K2	C12	IC.GEN.RGAP	STANDYBY GENERATOR	REMOTE GENERATOR ALARM PANEL	REMOTE ALARM PANEL	EOC						1	2/C #18	F	
K2	**K2**	**IC.GEN.RGAP**	**STANDYBY GENERATOR**	**REMOTE GENERATOR ALARM PANEL**	**REMOTE ALARM PANEL**	**EOC**						**1**	**2/C #18**	**F**	
C6	C6	C.FSC.GEN	STANDYBY GENERATOR	FUEL SYSTEM CONTROL PNL (PLC-1)	GENERATOR HARDWIRED CONTROL POINTS	120VAC	6						13/C #14	B	
		IC.FSC.GEN	STANDYBY GENERATOR	FUEL SYSTEM CONTROL PNL (PLC-1)	GENERATOR HARDWIRED CONTROL POINTS	EOC						1	(1) CAT 6	C	
C6, K3	C6	C.EPO.GEN	STANDYBY GENERATOR	EMERGENCY POWER OFF (EPO)	GENERATOR EPO BUTTON IN OPS BLDG.	24VDC	-	-	-	-	-	-	2/C #14	B	
K3	**K3**	**C.EPO.GEN**	**STANDYBY GENERATOR**	**EMERGENCY POWER OFF (EPO)**	**GENERATOR EPO BUTTON IN OPS BLDG.**	**24VDC**	**-**	**-**	**-**	**-**	**-**	**-**	**2/C #14**	**B**	
CONTROL JUNCTION BOX #1															
F16, G8, J2	F16	C.FSC.CJB1.1	CONTROL JUNCTION BOX #1	FUEL SYSTEM CONTROL PNL (PLC-1)	PLC DI/DO HOME RUN CABLE	120VAC							18PR, #14	B	
F16, G8, J2	F16	C.FSC.CJB1.2	CONTROL JUNCTION BOX #1	FUEL SYSTEM CONTROL PNL (PLC-1)	PLC DI/DO HOME RUN CABLE	120VAC							18PR, #14	B	
F17, G9, J3	F17	I.FSC.CJB1.3	CONTROL JUNCTION BOX #1	FUEL SYSTEM CONTROL PNL (PLC-1)	PLC AI/AO HOME RUN CABLE	4-20mA							(18) TSP #16	B	
MISCELLANEOUS EXISTING INSTRUMENTS AND SIGNALS															
F20, E4	F20	C.FSC.KM	FUEL SYSTEM CONTROL PNL (PLC-1)	KINDER MORGAN BUILDING	KINDER MORGAN READY TO RECEIVE	120VAC	0	1					2/C #14	B	
F20, E4	F20	C.FSC.SLTLSHH	FUEL SYSTEM CONTROL PNL (PLC-1)	SEWER LIFT STATION (PNL-16)	LIFT STATION LEVEL ALARM - LSHH	120VAC	1						2/C #14	B	
F20, E4	F20	C.FSC.SLTLA	FUEL SYSTEM CONTROL PNL (PLC-1)	SEWER LIFT STATION (PNL-16)	PUMP 16A/16B SEAL LEAK ALARM	120VAC	1 or 2						2/C #14	B	
F20, E4	F20	C.FSC.LABLSH	FUEL SYSTEM CONTROL PNL (PLC-1)	LAB SUMP (PNL-17)	LAB SUMP LSH/ALARM LIGHT	120VAC	1						2/C #14	B	
-	-	C.LC.PC	LIGHTING CONTACTOR	PHOTOCELL	PHOTOCELL	120VAC	-	-	-	-	-	-	2/C #14	B	
-	-	C.FSC.HORN	FUEL SYSTEM CONTROL PNL (PLC-1)	ALARM HORN	HORN SIGNAL FROM PLC	120VAC	-	1					2/C #14	B	
K1	K1	C.FACU.OPS	FIRE ALARM CONTROL UNIT (FACU)	OPERATIONS BUILDING (OPS)	FIRE ALARM SIGNALS	24VDC	-	-	-	-	-	-	N/A	N/A	
K1	**K1**	**C.FACU.OPS**	**FIRE ALARM CONTROL UNIT (FACU)**	**NEW OPERATIONS BUILDING (OPS)**	**FIRE ALARM SIGNALS**	**24VDC**	**-**	**-**	**-**	**-**	**-**	**-**	**N/A**	**N/A**	**PROVIDED BY FIRE SUBCONTRACTOR (SPEC. 28 31 00)**
WASTE TANK / OFFSPEC TANK															
F20, E4	F20	C.LSH.500	WASTE TANK LEVEL SWITCH	FUEL SYSTEM CONTROL PNL (PLC-1)	WASTE TANK LEVEL SWITCH	120VAC	1						2/C #14	B	
F8, E2	F8	I.LT.WT	WASTE TANK LEVEL TRANSMITTER	FUEL SYSTEM CONTROL PNL (PLC-1)	WASTE TANK LEVEL READINGS	4-20mA			1				(1) TSP #16	E	LOOP POWERED

	DI	DO	AI	AO	PULSE	COMM
PDC - PLC I/O TOTALS	**78**	**46**	**42**	**0**	**0**	**38**

CIRCUIT NUMBER KEY:

P - POWER
C - 120VAC CONTROL
I - 24VDC/4-20mA/PULSE/INSTRUMENTATION
IC - COMMUNICATION
IS - INTRINSICALLY SAFE

CABLE TYPE	DESCRIPTION
A	120V/208V/240V/480V SYSTEMS & BELOW: SINGLE CONDUCTOR POWER AND CONTROL - COPPER STRANDED WITH 600V RATING, UL LISTED, TYPE XHHW-2.
B	120V/208V/240V/480V SYSTEMS & BELOW: MULTI CONDUCTOR POWER AND CONTROL - COPPER STRANDED WITH 600V RATING, UL LISTED, TRAY CABLE (TC-ER), TYPE XHHW-2, PVC OVERALL JACKET, SUNLIGHT RESISTANT PER UL 1277.
C	ETHERNET OVER COPPER - 600V, 4 TWISTED PAIR, SHIELDED, CAT6 **OR CAT 6A** (AS IDENTIFIED) COMMUNICATION CABLE - COPPER, STRANDED, UNDERGROUND/BURIAL, WITH WATERBLOCK, SUNLIGHT RESISTANT, OIL RESISTANT, UL LISTED.
D	**BELDEN 1337A OR EQUIVALENT, TC-ER**
E	600V, TWISTED SHIELDED PAIR INSTRUMENTATION CABLE, TINNED COPPER CONDUCTORS, PVC JACKET, SUNLIGHT AND OIL RESISTANT, UL LISTED. BELDEN 9342 OR APPROVED EQUAL.
F	RS-485 - #18 TWISTED SHIELDED PAIR, TINNED COPPER CONDUCTORS, PVC JACKET, OVERALL SHIELD, SUNLIGHT AND OIL RESISTANT, UL LISTED
G	**300V, TWISTED SHIELDED PAIR INSTRUMENTATION CABLE, TINNED COPPER CONDUCTORS, OVERALL SHIELD, SUNLIGHT AND OIL RESISTANT, DIRECT BURIAL, UL LISTED. BELDEN 88760**
H	SINGLE MODE FIBER OPTIC CABLE - 09/125um, LOOSE TUBE, INDOOR/OUTDOOR, UNDERGROUND/BURIAL, BEND INSENSITIVE, WATER BLOCK, OIL RESISTANT, RODENT RESISTANT, POLYETHYLENE JACKET, SUITABLE FOR USE IN CABLE TRAY, UL LISTED.
NOT USED	

NOTES:

1. CIRCUIT FOUND WITHIN CIRCUITS I.FSC.CJB1.3 AND I.FSC.CJB1.4.
2. CIRCUIT FOUND WITHIN CIRCUITS C.FSC.CJB1.1 AND C.FSC.CJB1.2.
3. DIRECT BURIED TO GENERATOR.
4. DIRECT BURIED TO EXTERIOR LIGHT POLE.

12/20/2023

REGISTERED PROFESSIONAL ENGINEER 100084PE OREGON JULY 12, 2022 TIMOTHY RENSHAW
EXPIRES: 12/31/2024

no.	date	by	ckd	description
A	12/21/23	TSR	BAW	ISSUED FOR PERMIT

ISSUED FOR PERMIT ONLY

BURNS McDONNELL
9400 WARD PARKWAY
KANSAS CITY, MO 64114
816-333-9400
Burns & McDonnell Engineering Co, Inc.

date 04/24/2023
detailed S. JESBERG
designed T. RENSHAW
checked B. WINTER

PDX FUEL COMPANY L.L.C

PORTLAND INTERNATIONAL AIRPORT
5000 NE MARINE DR.
PORTLAND, OREGON 97218

PDX FACILITY IMPROVEMENTS
CABLE SCHEDULE - 7

project 153929
contract
drawing **E-709**
rev. **A**

file 153929E-709.dwg

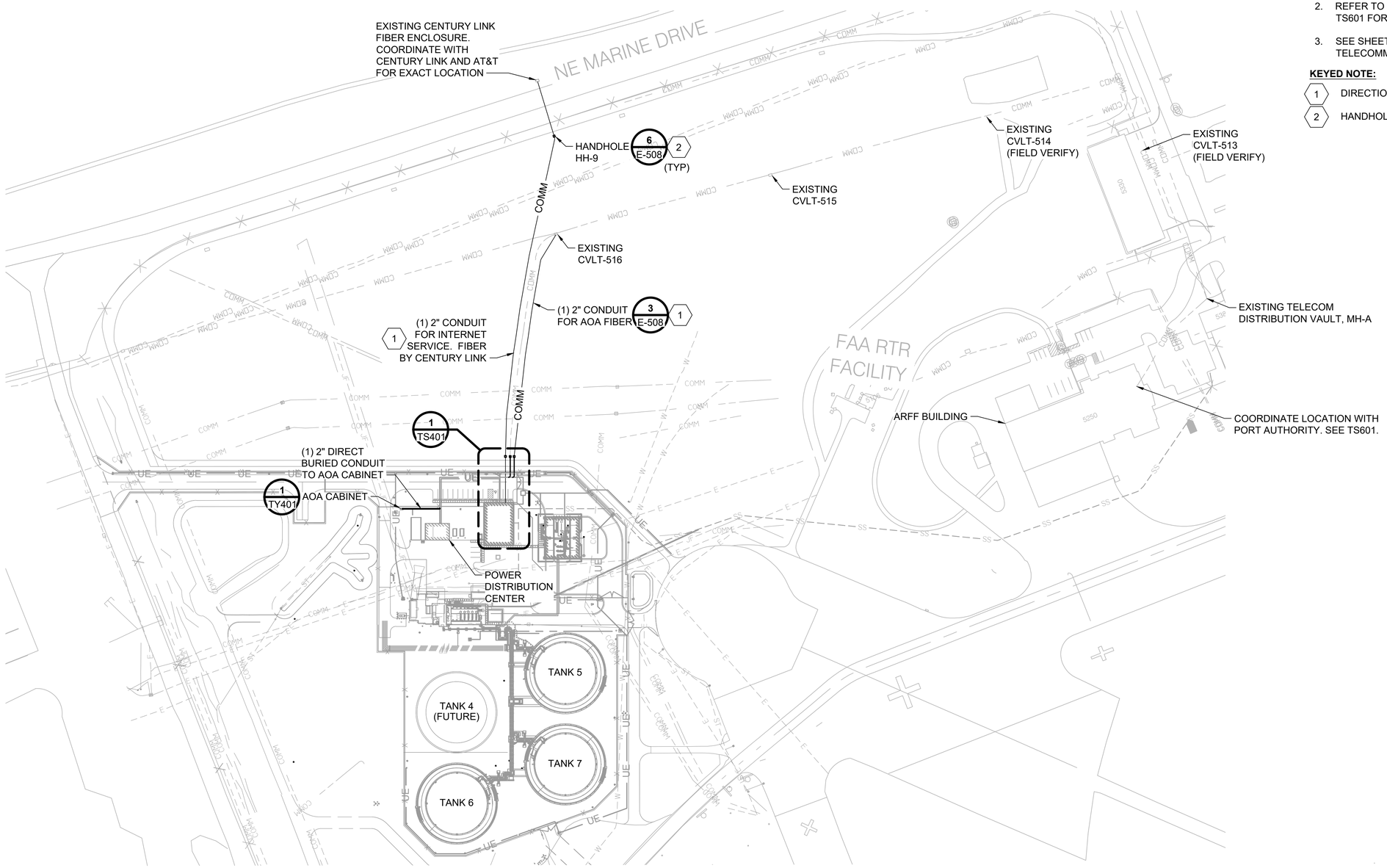

OVERALL TELECOMMUNICATION PLAN

0 100' 200'
SCALE IN FEET

NORTH

NOTES:

1. SEE SHEET E-001 FOR GENERAL NOTES, LEGEND AND ABBREVIATIONS.
2. REFER TO CABLING RISER DIAGRAM TS601 FOR MORE INFORMATION.
3. SEE SHEET TS601 FOR TELECOMMUNICATION DIAGRAM.

KEYED NOTE:

1. DIRECTIONAL BORE CONDUIT.
2. HANDHOLE TO HAVE A LOCKED LID.

no.	date	by	ckd	description
A	12/21/23	TSR	BAW	ISSUED FOR PERMIT

ISSUED FOR PERMIT ONLY

BURNS McDONNELL
9400 WARD PARKWAY
KANSAS CITY, MO 64114
816-333-9400
Burns & McDonnell Engineering Co, Inc.

date	detailed
04/24/2023	S. JESBERG
designed	checked
T. RENSHAW	B. WINTER

PDX FUEL COMPANY L.L.C

PORTLAND INTERNATIONAL AIRPORT
5000 NE MARINE DR.
PORTLAND, OREGON 97218

PDX FACILITY IMPROVEMENTS
OVERALL TELECOMMUNICATION PLAN

project	contract
153929	

drawing **TS101** rev. **A**

file 153929TS101.dwg

12/20/2023

REGISTERED PROFESSIONAL ENGINEER
1000MFE
OREGON
MAY 12, 2006
TIMOTHY RENSHAW
EXPIRES: 12/31/2024

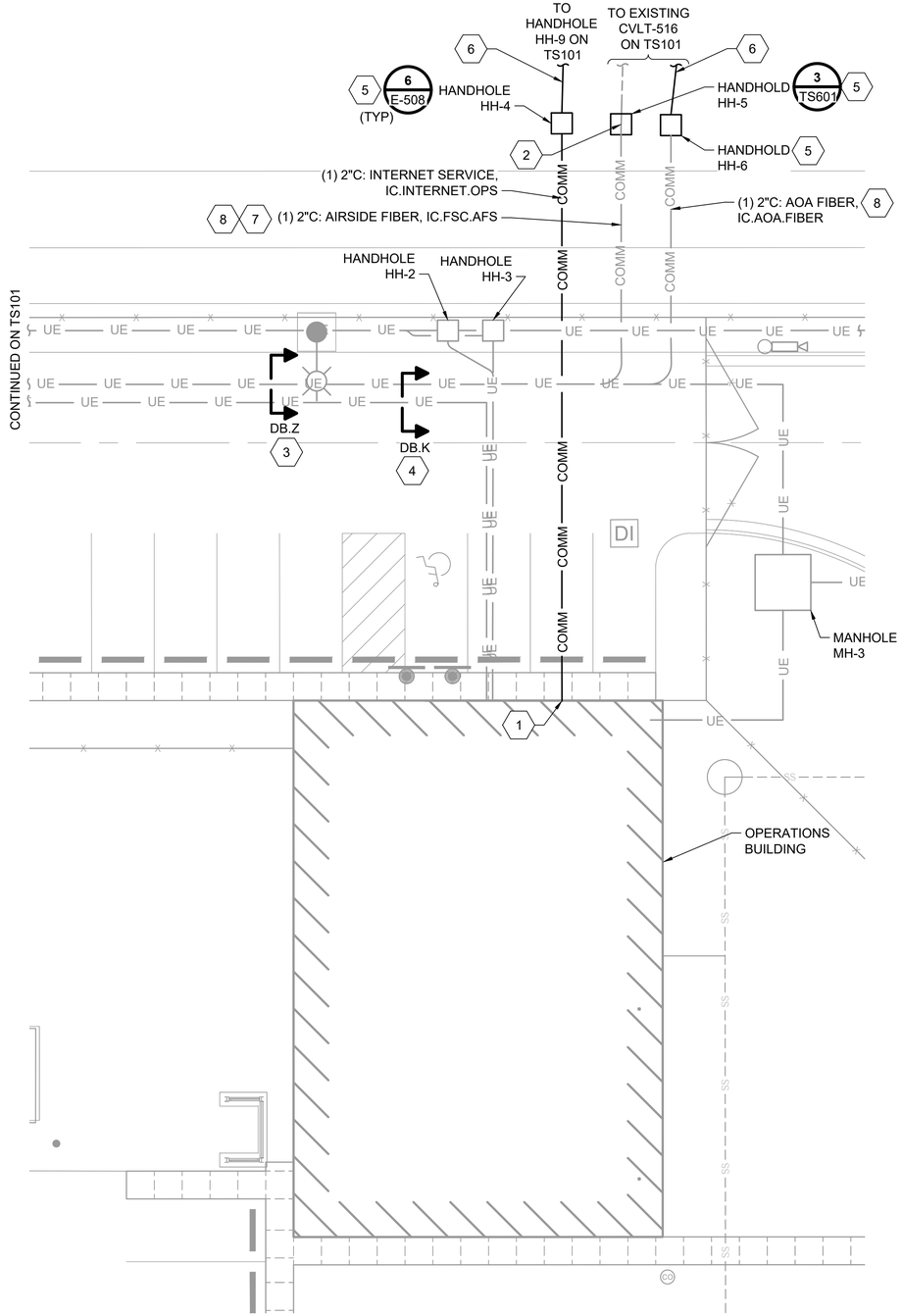

ENLARGED PLAN

ENLARGED TELECOMMUNICATION PLAN - OPERATIONS BUILDING

1 / TS101

0 8' 16' 24'
SCALE IN FEET

NORTH

NOTES:

1. SEE SHEET E-001 FOR GENERAL NOTES, LEGEND AND ABBREVIATIONS.
2. SEE 'E' DRAWINGS FOR NEW DUCTBANK PATHS. NEW DUCTBANK PATHS ARE SCREENED BACK ON 'TS' DRAWINGS FOR CLARITY.
3. THE FOLLOWING EQUIPMENT IS TO BE LOCATED WITHIN THE CORRESPONDING ROOMS:

   ROOM 111: CONTROL ROOM
   - INTERCOM MASTER / SECURITY CAMERA MONITORS
   - REPORT/ALARM PRINTER
   - EFSO SYSTEM HMI WORKSTATION
   - FUEL SYSTEM HMI WORKSTATION
   - GENERATOR REMOTE ALARM PANEL
   - UPS SYSTEM
   - EFSO PUSHBUTTON
   - GENERATOR EPO BUTTON

   ROOM 106: IT ROOM
   - ACCES CONTROL CENTER
   - INTERNET GATEWAY

KEYED NOTE:

1. FIBER OPTIC CABLING SHALL BE ROUTED TO OPERATIONS BUILDING IT ROOM. COORDINATE WITH JH KELLY FOR FINAL LOCATION AND ROUTING.
2. INTERCEPT EXISTING AIRSIDE FIBER WITH STAINLESS STEEL SPLICE CASE FOR BURIAL AND SUBMERGED APPLICATIONS. OUTDOOR RATED.
3. DUCTBANK SERVES THE FOLLOWING:
   A. AOA FIBER TO AOA CABINET
   B. IC.AOA.FIBER AIRSIDE EFSO FIBER TO PDC, IC.FSC.AFS
4. DUCTBANK SERVES THE FOLLOWING:
   A. CONTAINS: INTERNET DROP TO PDX, IC.INTERNET.PDC
5. HANDHOLE TO HAVE A LOCKED LID.
6. DIRECTIONAL BORE CONDUIT.
7. DEMOLISH AND REMOVE "COMM" CONDUIT BACK TO HH-5.
8. DUCTBANK BY OTHERS

no.	date	by	ckd	description
A	12/21/23	TSR	BAW	ISSUED FOR PERMIT

ISSUED FOR PERMIT ONLY

BURNS McDONNELL
9400 WARD PARKWAY
KANSAS CITY, MO 64114
816-333-9400
Burns & McDonnell Engineering Co, Inc.

date	detailed
04/24/2023	S. JESBERG
designed	checked
T. RENSHAW	B. WINTER

PDX FUEL COMPANY L.L.C

PORTLAND INTERNATIONAL AIRPORT
5000 NE MARINE DR.
PORTLAND, OREGON 97218

12/20/2023

REGISTERED PROFESSIONAL ENGINEER 100084PE OREGON JANUARY 12, 2021 TIMOTHY RENSHAW
EXPIRES: 12/31/2024

PDX FACILITY IMPROVEMENTS
ENLARGED TELECOMMUNICATION PLAN - OPERATIONS BUILDING

project	contract
153929	

drawing **TS401** rev. **A**

file 153929TS401.dwg

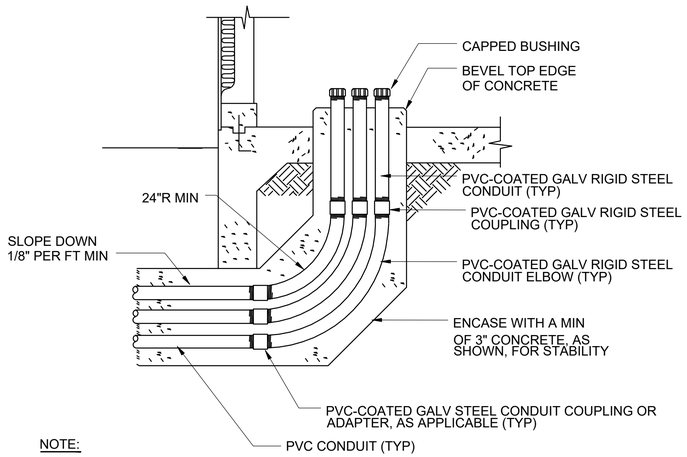

NOTE:

1. THIS DETAIL IS A TYP MULTIDUCT ARRANGEMENT.

DETAIL 1 -

TYPICAL STUBBED DUCTBANK RISER

NOT TO SCALE

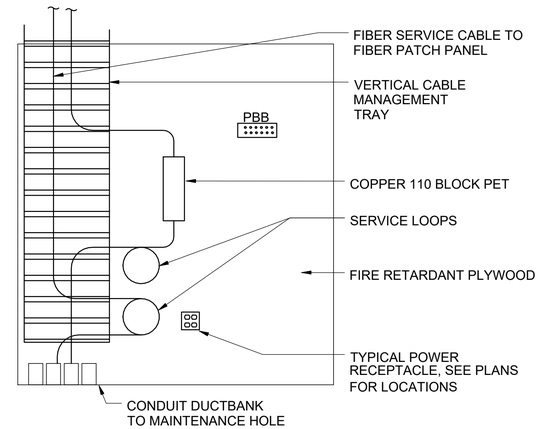

DETAIL 2 -

TYPICAL TELECOMM CABLE ENTRANCE

NOT TO SCALE

no.	date	by	ckd	description
A	12/21/23	TSR	BAW	ISSUED FOR PERMIT

ISSUED FOR PERMIT ONLY

BURNS McDONNELL
9400 WARD PARKWAY
KANSAS CITY, MO 64114
816-333-9400
Burns & McDonnell Engineering Co, Inc.

date	detailed
04/24/2023	S. JESBERG
designed	checked
T. RENSHAW	B. WINTER

PDX FUEL COMPANY L.L.C

PORTLAND INTERNATIONAL AIRPORT
5000 NE MARINE DR.
PORTLAND, OREGON 97218

12/20/2023

REGISTERED PROFESSIONAL ENGINEER 100084PE OREGON JULY 12, 2022 TIMOTHY RENSHAW

EXPIRES: 12/31/2024

PDX FACILITY IMPROVEMENTS

TELECOMMUNICATION DETAILS

project	contract
153929	

drawing **TS501** rev. **A**

file 153929TS501.dwg

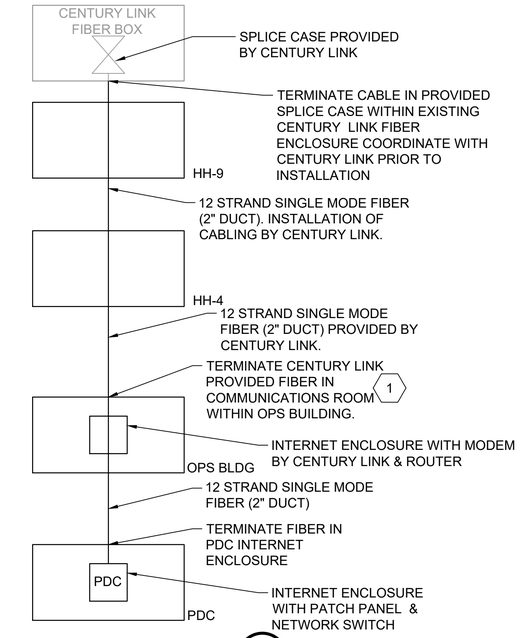

DIAGRAM 1 -
SERVICE PROVIDER OSP RISER DIAGRAM
NOT TO SCALE

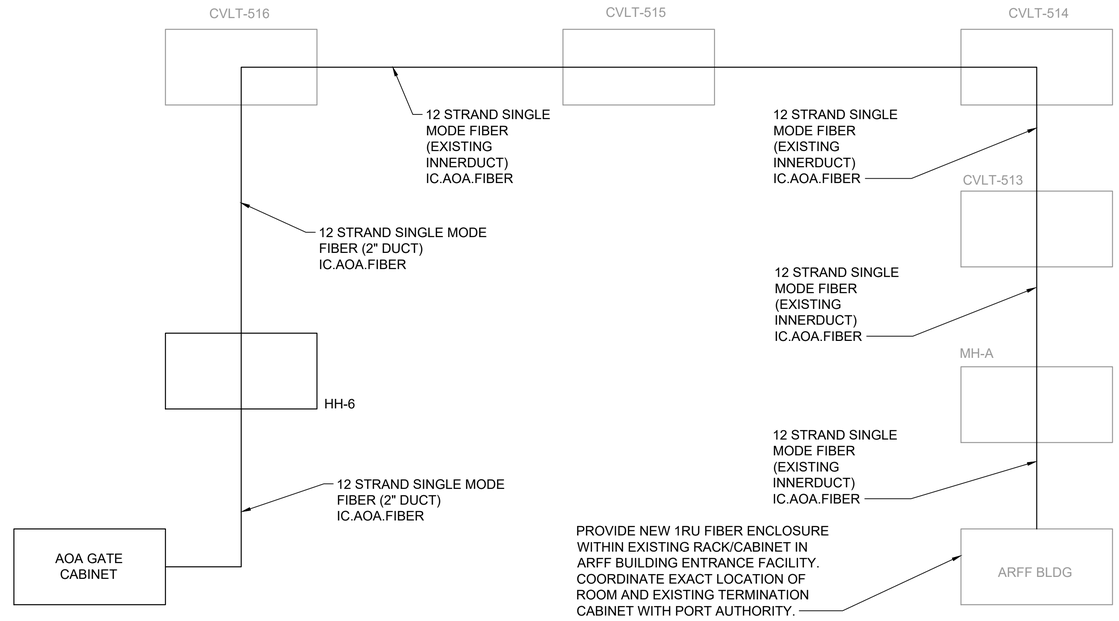

DIAGRAM 2 -
AOA FIBER RISER DIAGRAM
NOT TO SCALE

NOTES:

1. SEE SHEET E-001 FOR GENERAL NOTES, LEGEND AND ABBREVIATIONS.
2. ADD FABRIC (1) 2" 3-CELL MESH INNERDUCT TO NEW PATHWAYS.
3. PROVIDE 25' OF SLACK (TYP) FOR EACH MANHOLE OR HANDHOLE.
4. TERMINATE FIBER ON DUPLEX LC MODULES

KEYED NOTE:

1. FIBER OPTIC CABLING SHALL BE ROUTED TO OPERATIONS BUILDING IT ROOM. COORDINATE WITH JH KELLY FOR FINAL TERMINATION AND ROUTING.
2. MATCH STRAND COUNT OF EXISTING FIBER

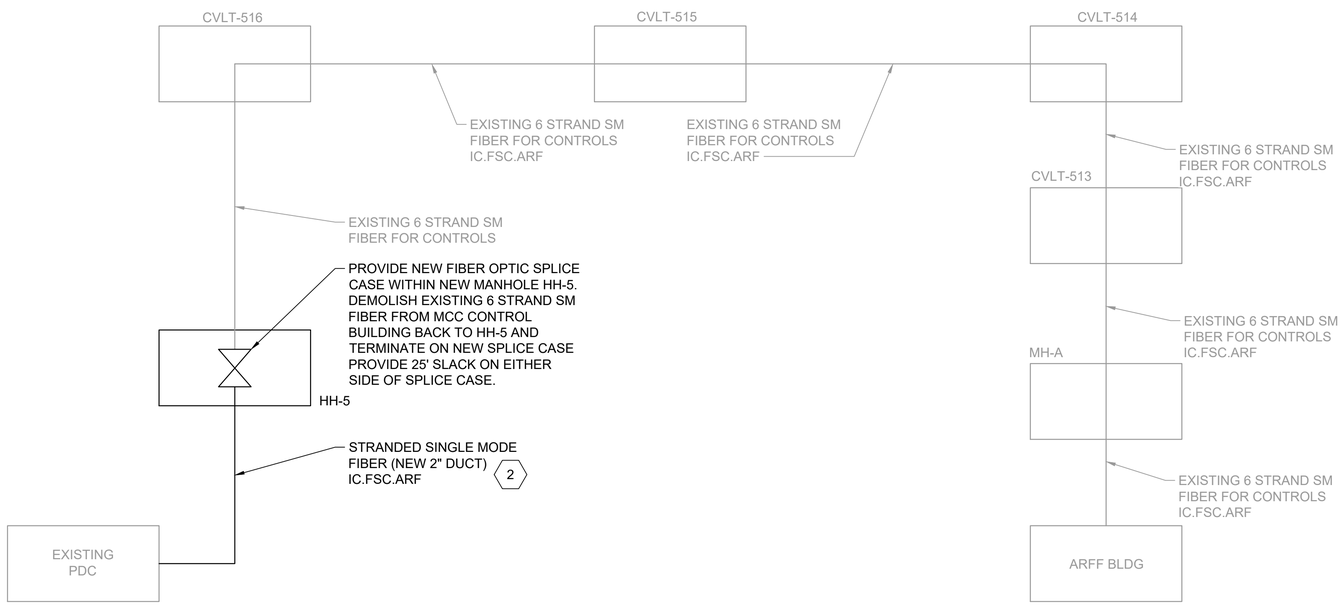

DIAGRAM 3 -
CONTROL FIBER RISER DIAGRAM - NEW WORK
NOT TO SCALE

12/20/23

REGISTERED PROFESSIONAL ENGINEER 100084PE OREGON MAY 12, 2023 TIMOTHY RENSHAW
EXPIRES: 12/31/2024

no.	date	by	ckd	description
A	12/21/23	TSR	BAW	ISSUED FOR PERMIT

ISSUED FOR PERMIT ONLY

BURNS McDONNELL
9400 WARD PARKWAY
KANSAS CITY, MO 64114
816-333-9400
Burns & McDonnell Engineering Co, Inc.

date	detailed
04/24/2023	S. JESBERG
designed	checked
T. RENSHAW	B. WINTER

PDX FUEL COMPANY L.L.C

PORTLAND INTERNATIONAL AIRPORT
5000 NE MARINE DR.
PORTLAND, OREGON 97218

PDX FACILITY IMPROVEMENTS
TELECOMMUNICATION DIAGRAM

project	contract
153929	

drawing **TS601** rev. **A**

file 153929TS601.dwg

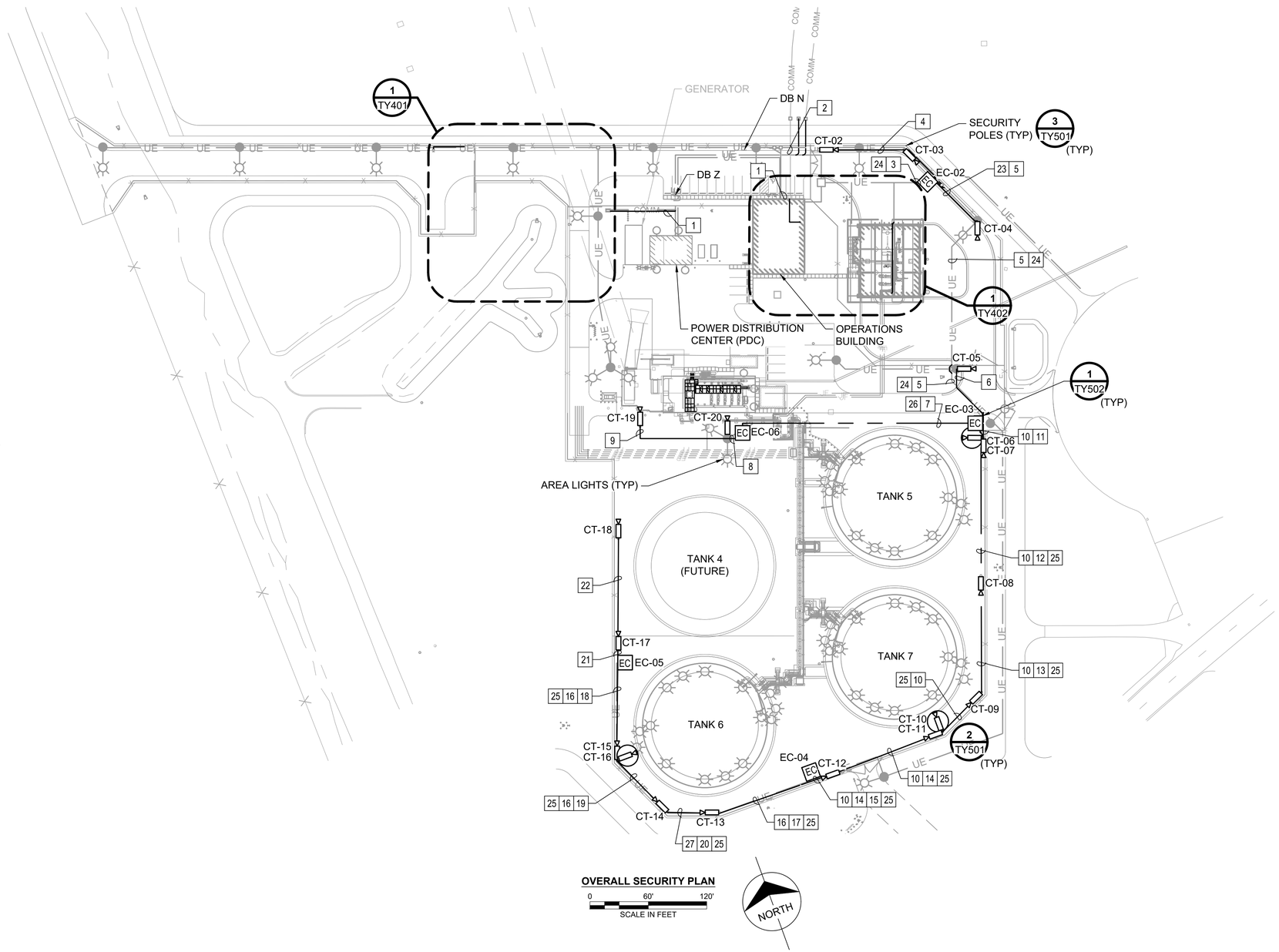

OVERALL SECURITY PLAN

0 60' 120'
SCALE IN FEET

LEGEND:

- CR CARD READER
- GC GATE CONTROLLER
- IC INTERCOM
- LD LOOP DETECTOR
- GM GATE MOTOR
- FIXED CAMERA
- SECURITY CAMERA
- SECURITY POLE

CONDUIT SCHEDULE: #

1. 1-1/2"C: IC.AOACAB.CA01
2. 2"C: IC.OPS.EC01
3. 2"C: IC.OPS.EC02, IC.OPS.EC03, IC.OPS.EC04, IC.OPS.EC05, IC.OPS.EC06
4. 2"C: IC.EC02.CT02, IC.EC02.CT03
5. 2"C: IC.OPS.EC03, IC.OPS.EC04, IC.OPS.EC05, IC.OPS.EC06
6. 2"C: IC.EC03.CT05
7. 1"C: IC.OPS.EC06
8. 2"C: IC.EC06.CT19, IC.EC06.CT20
9. 1"C: IC.EC06.CT19
10. 2"C: IC.OPS.EC04, IC.OPS.EC05
11. 2"C: IC.EC03.CT06, IC.EC03.CT07
12. 2"C: IC.EC03.CT08, IC.EC03.CT09
13. 2"C: IC.EC03.CT09
14. 2"C: IC.EC04.CT10, IC.EC04.CT11
15. 1"C: IC.EC04.CT12
16. 1"C: IC.EC04.CT13, IC.EC04.CT14
17. 1"C: IC.OPS.EC05
18. 2"C: IC.EC05.CT13, IC.EC05.CT14, IC.EC05.CT15, IC.EC05.CT16
19. 1"C: IC.EC05.CT14
20. 1"C: IC.EC05.CT13
21. 2"C: IC.EC05.CT17, IC.EC05.CT18
22. 2"C: IC.EC05.CT18
23. 1"C: IC.EC02.CT04
24. 2"C: P.PA2.75, P.PA2.77
25. 1"C: P.PA2.75
26. 1"C: P.PA2.77
27. 1"C: IC.EC04.CT14

no.	date	by	ckd	description
A	12/21/23	TSR	BAW	ISSUED FOR PERMIT

ISSUED FOR PERMIT ONLY

BURNS McDONNELL
9400 WARD PARKWAY
KANSAS CITY, MO 64114
816-333-9400
Burns & McDonnell Engineering Co, Inc.

date	detailed
04/24/2023	S. JESBERG
designed	checked
T. RENSHAW	B. WINTER

PDX FUEL COMPANY L.L.C

PORTLAND INTERNATIONAL AIRPORT
5000 NE MARINE DR.
PORTLAND, OREGON 97218

PDX FACILITY IMPROVEMENTS
OVERALL SECURITY PLAN

project	contract
153929	

drawing **TY101** rev. **A**

file 153929TY101.dwg

12/20/2023

REGISTERED PROFESSIONAL ENGINEER
100084PE
OREGON
JULY 12, 2022
TIMOTHY RENSHAW
EXPIRES: 12/31/2024

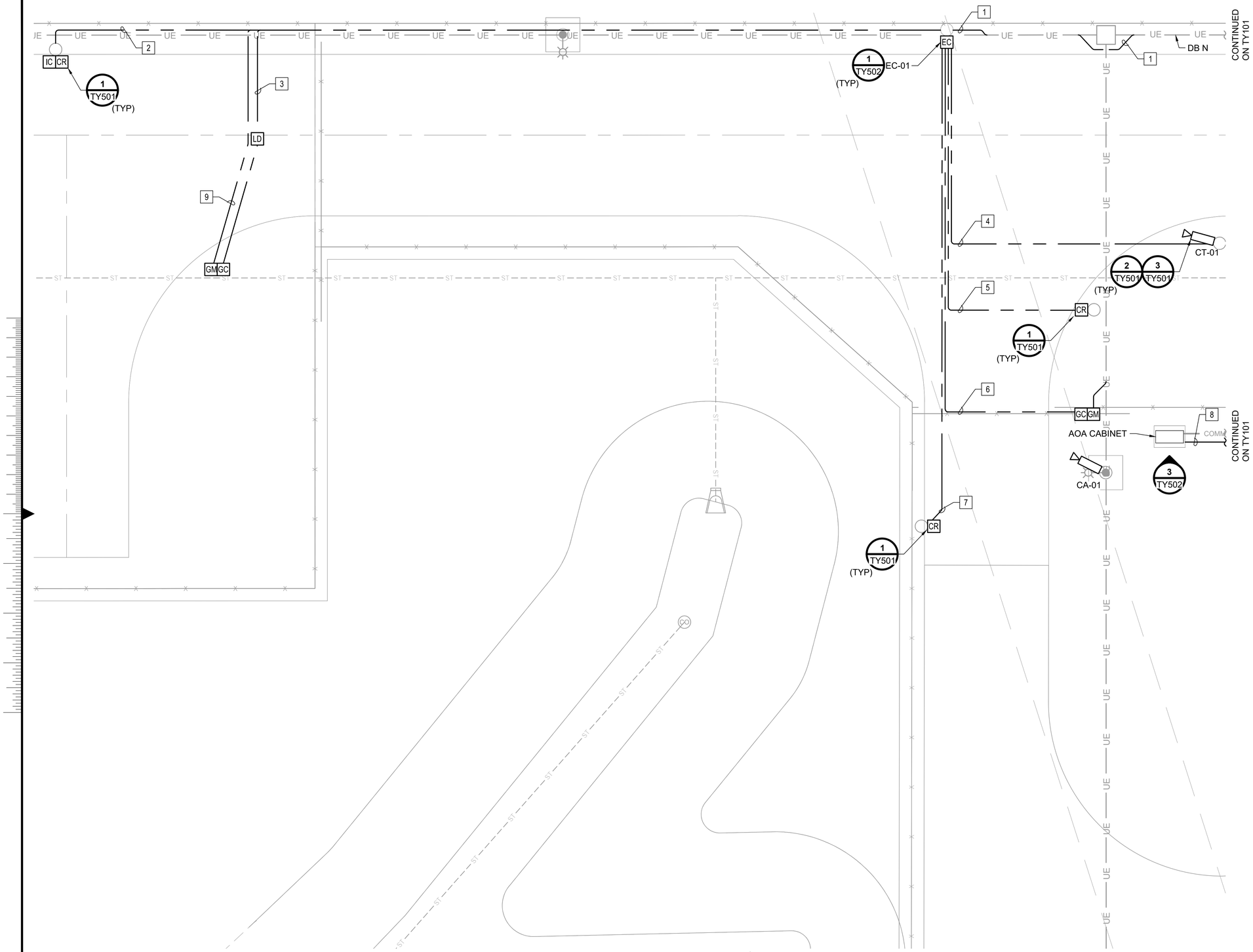

NOTES:

1. FINAL CONDUIT ROUTING AND EQUIPMENT PLACEMENT IN THE OPERATIONS BUILDING WILL BE PROVIDED BY JH KELLEY.

LEGEND:

- EC ENCLOSURE CABINET
- LD LOOP DETECTOR
- GC GATE CONTROLLER
- IC INTERCOM
- CR CARD READER
- GM GATE MOTOR
- FIXED CAMERA

CONDUIT SCHEDULE: #

1. 2"C: IC.OPS.EC01
2. 2"C: IC.EC01.ICCR
3. 2"C: IC.EC01.LDGC
4. 2"C: IC.EC01.CT01
5. 2"C: IC.EC01.CR
6. 2"C: IC.EC01.GC
7. 2"C: IC.EC01.CR
8. 1-1/2"C: IC.AOACAB.CA01
9. 2"C: P.PNLA2.57

no.	date	by	ckd	description
A	12/21/23	TSR	BAW	ISSUED FOR PERMIT

ENLARGED PLAN 1 TY101

ENLARGED SECURITY PLAN - AOA GATE

0 4' 8' 16'
SCALE IN FEET

NORTH

12/20/2023

REGISTERED PROFESSIONAL ENGINEER 100088PE OREGON JULY 12, 2022 TIMOTHY RENSHAW
EXPIRES: 12/31/2024

ISSUED FOR PERMIT ONLY

BURNS McDONNELL
9400 WARD PARKWAY
KANSAS CITY, MO 64114
816-333-9400
Burns & McDonnell Engineering Co, Inc.

date	detailed
04/24/2023	S. JESBERG
designed	checked
T. RENSHAW	B. WINTER

PDX FUEL COMPANY L.L.C

PORTLAND INTERNATIONAL AIRPORT
5000 NE MARINE DR.
PORTLAND, OREGON 97218

PDX FACILITY IMPROVEMENTS
ENLARGED SECURITY PLAN - AOA GATE

project	contract
153929	
drawing	rev.
TY401	A

file 153929TY401.dwg

Scale For Microfilming: Millimeters / Inches

\\BMCD\DFS\CLIENTS\ANF\PORTLANDPORT\PDX\153929_FACILITYIMPRV\DESIGN\ELEC\SHEETS\153929TY401.DWG 12/20/2023 10:30 AM SNJESBERG

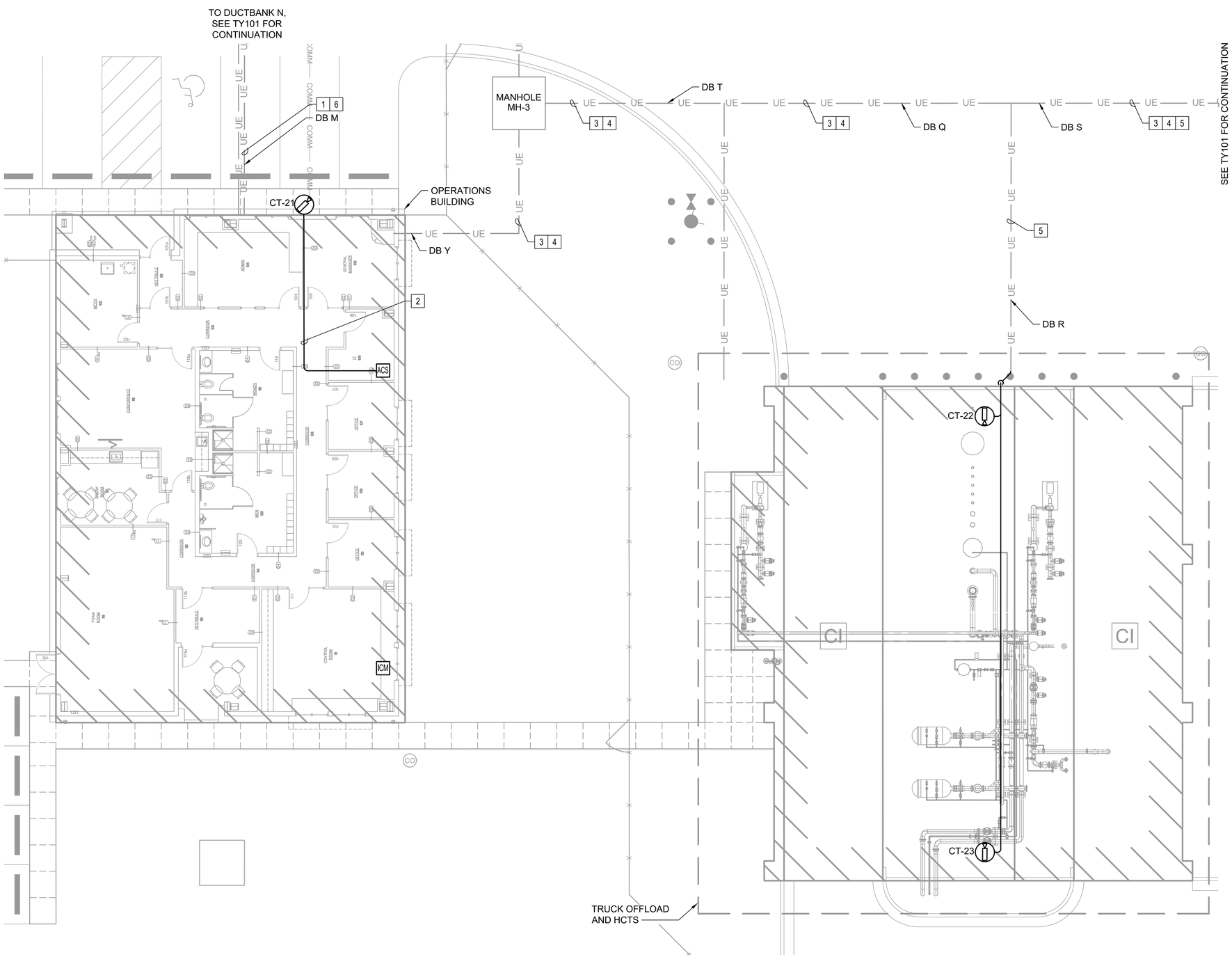

NOTES:

1. FINAL CONDUIT ROUTING AND EQUIPMENT PLACEMENT IN THE OPERATIONS BUILDING WILL BE PROVIDED.

LEGEND:

- ACS — ACCESS CONTROL SYSTEM
- ICM — INTERCOM MASTER
- SECURITY CAMERA

CONDUIT SCHEDULE: #

1. 2"C: IC.OPS.EC01
2. 1-1/2"C: IC ACS.CT21
3. 2"C: IC.OPS.EC02, IC.OPS.EC03, IC.OPS.EC04, IC.OPS.EC05, IC.OPS.EC06
4. 2"C: P.PA2.75, P.PA2.77
5. 2"C: IC.EC02.CT22, IC.EC02.CT23
6. 2"C: P.PA2.79

ENLARGED PLAN 1 TY101

ENLARGED SECURITY PLAN - OFFLOAD & HCTS

0 4' 8' 16'
SCALE IN FEET

NORTH

12/20/2023

REGISTERED PROFESSIONAL ENGINEER 100064PE OREGON JULY 12, 2022 TIMOTHY RENSHAW
EXPIRES: 12/31/2024

no.	date	by	ckd	description
A	12/21/23	TSR	BAW	ISSUED FOR PERMIT

ISSUED FOR PERMIT ONLY

BURNS McDONNELL
9400 WARD PARKWAY
KANSAS CITY, MO 64114
816-333-9400
Burns & McDonnell Engineering Co, Inc.

date	detailed
04/24/2023	S. JESBERG
designed	checked
T. RENSHAW	B. WINTER

PDX FUEL COMPANY L.L.C

PORTLAND INTERNATIONAL AIRPORT
5000 NE MARINE DR.
PORTLAND, OREGON 97218

PDX FACILITY IMPROVEMENTS
ENLARGED SECURITY PLAN - OFFLOAD & HCTS

project	contract
153929	

drawing **TY402** rev. **A**

file 153929TY402.dwg

Scale For Microfilming: Millimeters / Inches

\\BMCD\DFS\CLIENTS\ANF\PORTLANDPORT\PDX\153929_FACILITYIMPRV\DESIGN\ELEC\SHEETS\153929TY402.DWG 12/20/2023 10:33 AM SNJESBERG

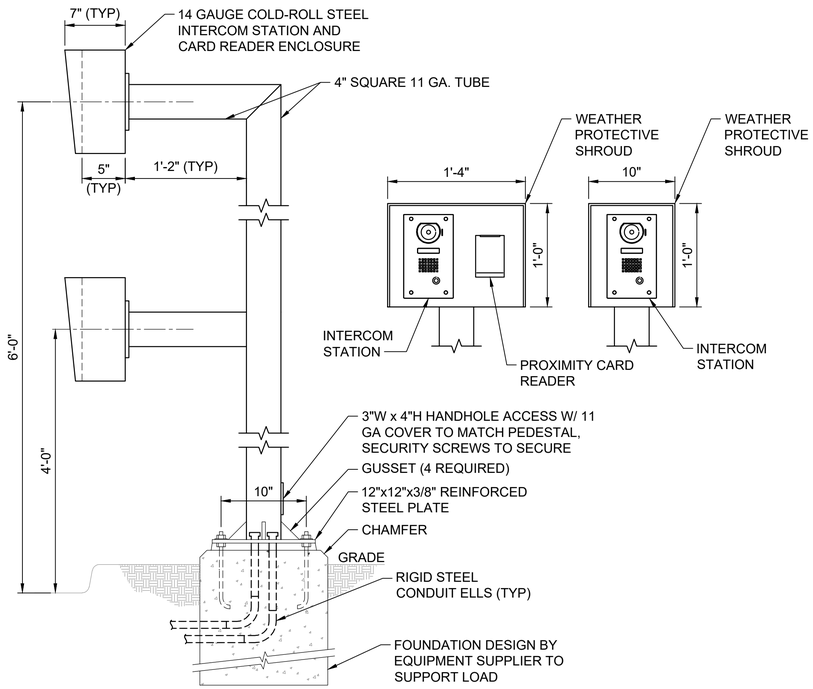

NOTES:

1. REFER TO S-531 FOR FOUNDATION REQUIREMENTS.

DETAIL 1 -
PEDESTAL MOUNTED CARD READER AND INTERCOM
NOT TO SCALE

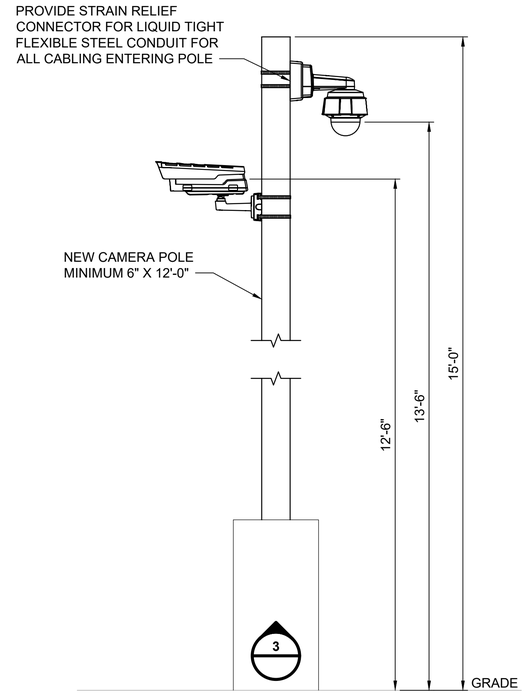

NOTES:

1. REFER TO S-531 FOR FOUNDATION REQUIREMENTS.

DETAIL 2 -
CAMERA ON POLE
NOT TO SCALE

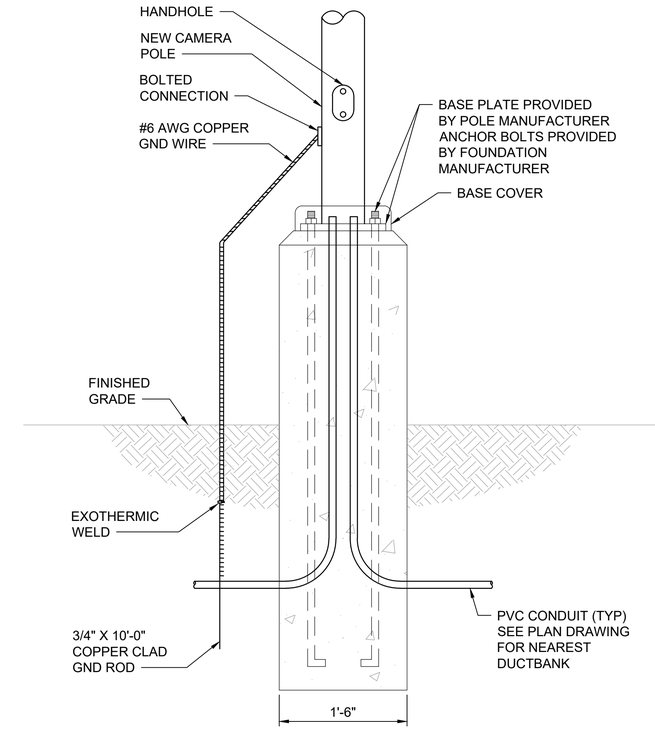

NOTES:

1. REFER TO S-531 FOR FOUNDATION REQUIREMENTS.

DETAIL 3 -
CAMERA POLE FOUDNATION - CONDUIT BELOW GRADE
NOT TO SCALE

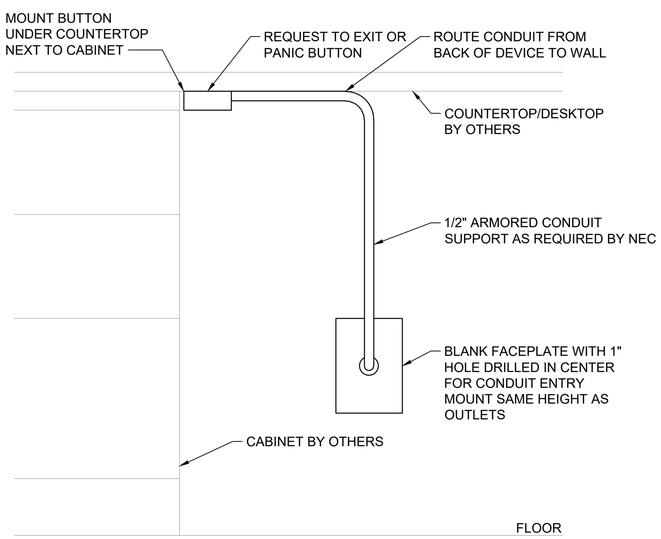

DETAIL 4 -
UNDER COUNTERTOP REQUEST TO EXIT AND PANIC BUTTON
NOT TO SCALE

12/20/2023

REGISTERED PROFESSIONAL ENGINEER 100084PE OREGON JULY 12, 2022 TIMOTHY RENSHAW
EXPIRES: 12/31/2024

no.	date	by	ckd	description
A	12/21/23	TSR	BAW	ISSUED FOR PERMIT

ISSUED FOR PERMIT ONLY

BURNS McDONNELL
9400 WARD PARKWAY
KANSAS CITY, MO 64114
816-333-9400
Burns & McDonnell Engineering Co, Inc.

date	detailed
04/24/2023	S. JESBERG
designed	checked
T. RENSHAW	B. WINTER

PDX FUEL COMPANY L.L.C

PORTLAND INTERNATIONAL AIRPORT
5000 NE MARINE DR.
PORTLAND, OREGON 97218

PDX FACILITY IMPROVEMENTS
SECURITY DETAILS - 1

project	contract
153929	

drawing **TY501** rev. **A**

file 153929TY501.dwg

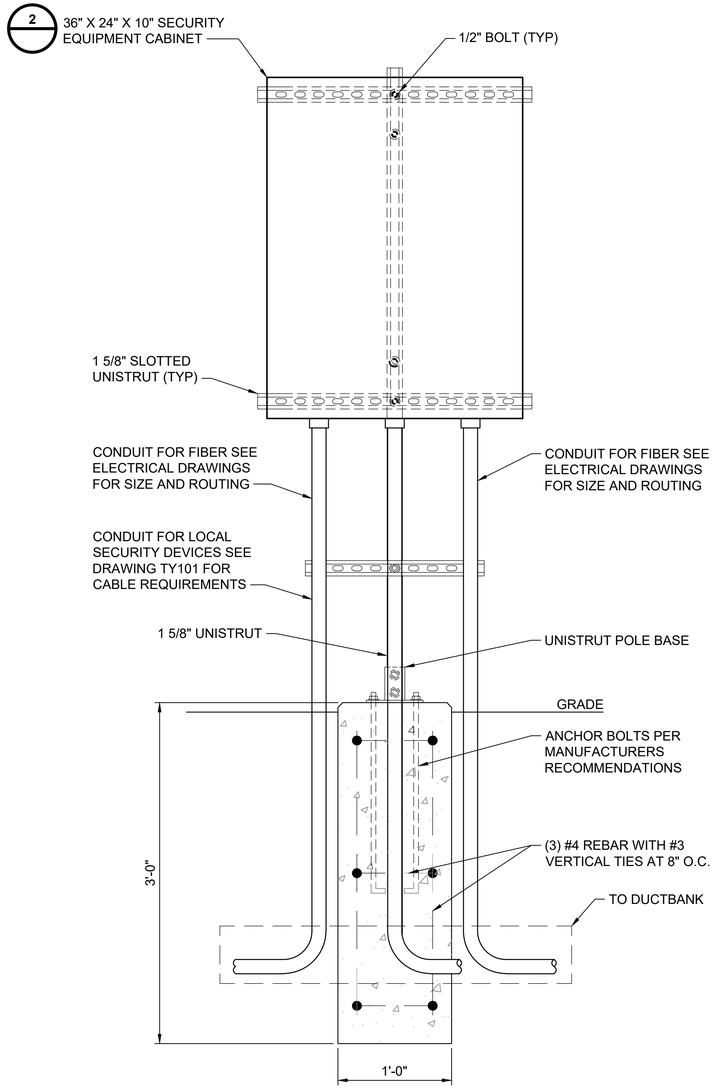

DETAIL 1 / -
EQUIPMENT CABINET MOUNTING DETAIL
NOT TO SCALE

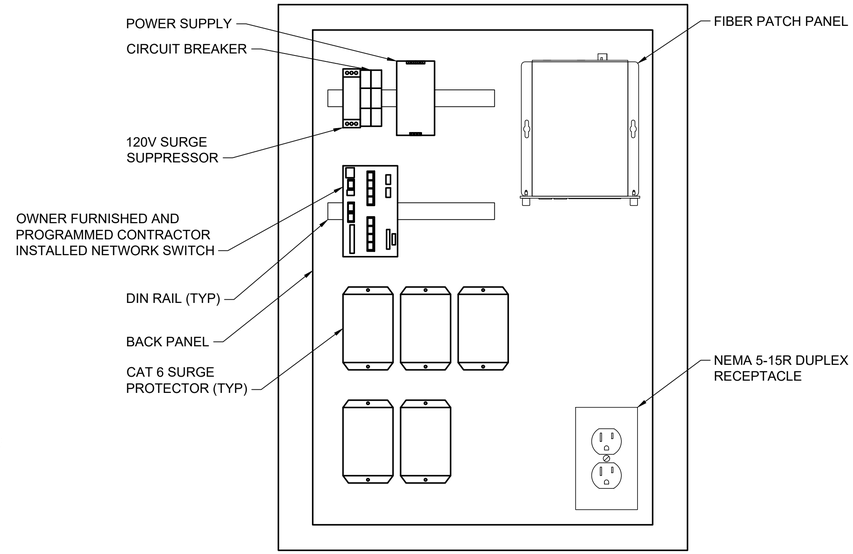

DETAIL 2 / -
EQUIPMENT CABINET
NOT TO SCALE

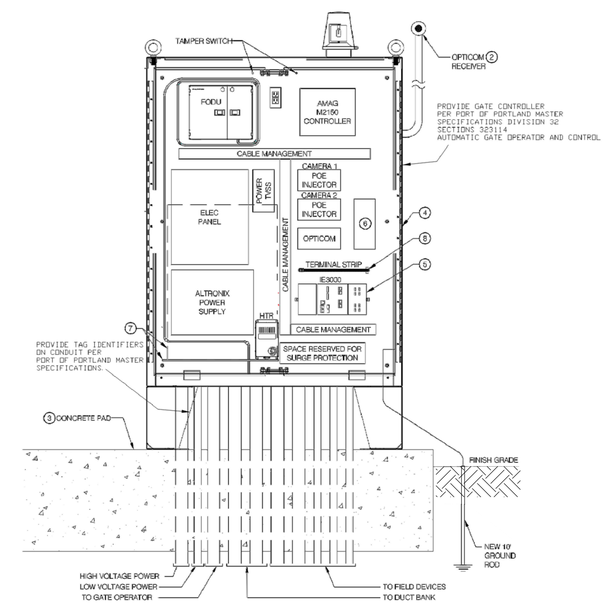

AOA CABINET KEYED NOTES:

1. N/A
2. OPTICOM RECEIVER MOUNTED ON 1-1/2" GRC, AS REQUIRED.
3. CONCRETE PAD.
4. NEMA 4 ENCLOSURE WITH HASP AND STAPLE FOR PORT PROVIDED PAD LOCK. PROVIDE WITH ENCLOSURE LABEL, GROUND BUS AND DATA POCKET.
5. OFCI CISCO IE3000 ETHERNET SWITCH, CONTRACTOR TO MOUNT ON CONTRACTOR PROVIDED DIN RAIL.
6. CAT 6 SURGE PROTECTOR(S). PROVIDE IAW 271000.
7. PROVIDE SHELF MOUNTED ON "L" BRACKETS AND UPS.
8. LOW VIS SYSTEM CONTROL RELAY.

ELEVATION 3 / TY401
AOA CABINET
(NOT TO SCALE)

no.	date	by	ckd	description
A	12/21/23	TSR	BAW	ISSUED FOR PERMIT

ISSUED FOR PERMIT ONLY

BURNS McDONNELL
9400 WARD PARKWAY
KANSAS CITY, MO 64114
816-333-9400
Burns & McDonnell Engineering Co, Inc.

date	detailed
04/24/2023	S. JESBERG
designed	checked
T. RENSHAW	B. WINTER

PDX FUEL COMPANY L.L.C

PORTLAND INTERNATIONAL AIRPORT
5000 NE MARINE DR.
PORTLAND, OREGON 97218

PDX FACILITY IMPROVEMENTS
SECURITY DETAILS - 2

12/20/2023

REGISTERED PROFESSIONAL ENGINEER 100084PE OREGON MAY 12, 2023 TIMOTHY RENSHAW
EXPIRES: 12/31/2024

project	contract
153929	

drawing **TY502** rev. **A**

file 153929TY502.dwg

Scale For Microfilming: Millimeters / Inches

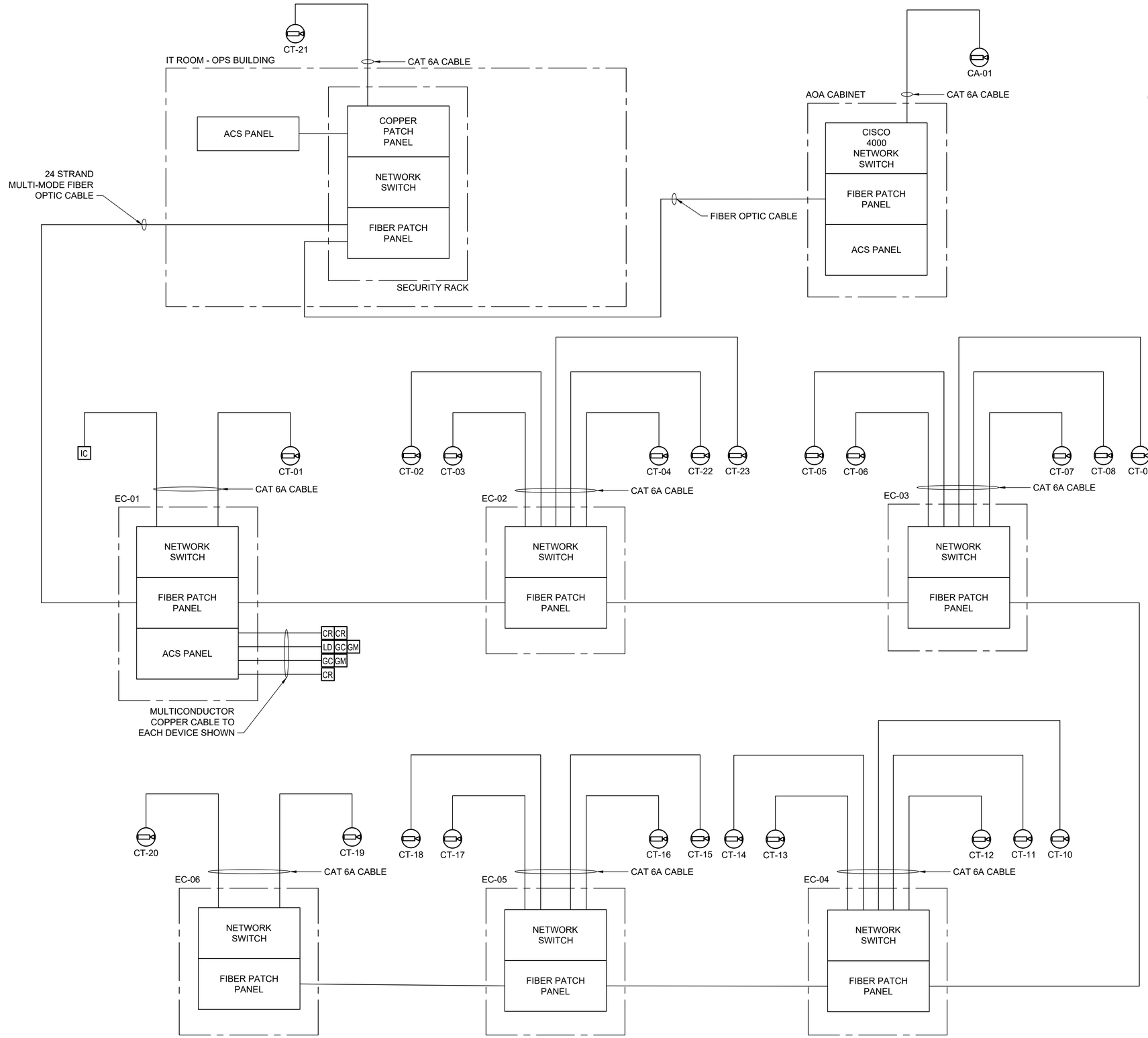

NOTES:

1. SEE CAMERA SCHEDULE ON DRAWING TY711 FOR CAMERA DESCRIPTION AND TERMINATION LOCATIONS.

LEGEND:

- SECURITY CAMERA
- CR CARD READER
- GC GATE CONTROLLER
- IC INTERCOM
- LD LOOP DETECTOR
- GM GATE MOTOR

no.	date	by	ckd	description
A	12/21/23	TSR	BAW	ISSUED FOR PERMIT

ISSUED FOR PERMIT ONLY

BURNS McDONNELL
9400 WARD PARKWAY
KANSAS CITY, MO 64114
816-333-9400
Burns & McDonnell Engineering Co, Inc.

date	detailed
04/24/2023	S. JESBERG
designed	checked
T. RENSHAW	B. WINTER

PDX FUEL COMPANY L.L.C

PORTLAND INTERNATIONAL AIRPORT
5000 NE MARINE DR.
PORTLAND, OREGON 97218

PDX FACILITY IMPROVEMENTS
SECURITY RISER DIAGRAM

project	contract
153929	

drawing **TY651** rev. **A**

file 153929TY651.dwg

12/20/2023

REGISTERED PROFESSIONAL ENGINEER
100084PE
OREGON
JULY 12, 2024
TIMOTHY RENSHAW
EXPIRES: 12/31/2024

SECURITY CAMERA SCHEDULE

ID	TYPE	MODEL NUMBER	MANUFACTURER	SERVED FROM	LOCATION	MOUNTING TYPE	MOUNTING HEIGHT	IMAGE DEFINITION
CA-01	FIXED COLOR	Q1656-LE	AXIS COMMUNICATIONS	AOA CABINET	NORTH ENTRANCE	LIGHT POLE	15' 0"	4MP
CT-01	FIXED COLOR	Q1656-LE	AXIS COMMUNICATIONS	EC-01	NORTH ENTRANCE	SECURITY POLE	12' 6"	4MP
CT-02	FIXED COLOR	Q1656-LE	AXIS COMMUNICATIONS	EC-02	OFFLOAD EXTERIOR	SECURITY POLE	12' 6"	4MP
CT-03	FIXED COLOR	Q1656-LE	AXIS COMMUNICATIONS	EC-02	OFFLOAD EXTERIOR	SECURITY POLE	12' 6"	4MP
CT-04	FIXED COLOR	Q1656-LE	AXIS COMMUNICATIONS	EC-02	OFFLOAD EXTERIOR	LIGHT POLE	15' 0"	4MP
CT-05	FIXED COLOR	Q1656-LE	AXIS COMMUNICATIONS	EC-03	EAST ENTRANCE	LIGHT POLE	15' 0"	4MP
CT-06	FIXED COLOR	Q1656-LE	AXIS COMMUNICATIONS	EC-03	TANK EXTERIOR	SECURITY POLE	12' 6"	4MP
CT-07	PTZ DOME	Q6075-E	AXIS COMMUNICATIONS	EC-03	TANK EXTERIOR	SECURITY POLE	13' 6"	1080p
CT-08	FIXED COLOR	Q1656-LE	AXIS COMMUNICATIONS	EC-03	TANK EXTERIOR	SECURITY POLE	12' 6"	4MP
CT-09	FIXED COLOR	Q1656-LE	AXIS COMMUNICATIONS	EC-03	TANK EXTERIOR	SECURITY POLE	12' 6"	4MP
CT-10	FIXED COLOR	Q1656-LE	AXIS COMMUNICATIONS	EC-04	TANK EXTERIOR	SECURITY POLE	12' 6"	4MP
CT-11	PTZ DOME	Q6075-E	AXIS COMMUNICATIONS	EC-04	TANK EXTERIOR	SECURITY POLE	13' 6"	1080p
CT-12	FIXED COLOR	Q1656-LE	AXIS COMMUNICATIONS	EC-04	TANK EXTERIOR	SECURITY POLE	12' 6"	4MP
CT-13	FIXED COLOR	Q1656-LE	AXIS COMMUNICATIONS	EC-04	TANK EXTERIOR	SECURITY POLE	12' 6"	4MP
CT-14	FIXED COLOR	Q1656-LE	AXIS COMMUNICATIONS	EC-04	TANK EXTERIOR	SECURITY POLE	12' 6"	4MP
CT-15	FIXED COLOR	Q1656-LE	AXIS COMMUNICATIONS	EC-05	TANK EXTERIOR	SECURITY POLE	12' 6"	4MP
CT-16	PTZ DOME	Q6075-E	AXIS COMMUNICATIONS	EC-05	TANK EXTERIOR	SECURITY POLE	13' 6"	1080p
CT-17	FIXED COLOR	Q1656-LE	AXIS COMMUNICATIONS	EC-05	TANK EXTERIOR	SECURITY POLE	12' 6"	4MP
CT-18	FIXED COLOR	Q1656-LE	AXIS COMMUNICATIONS	EC-05	TANK EXTERIOR	SECURITY POLE	12' 6"	4MP
CT-19	FIXED COLOR	Q1656-LE	AXIS COMMUNICATIONS	EC-06	TANK EXTERIOR	SECURITY POLE	12' 6"	4MP
CT-20	FIXED COLOR	Q1656-LE	AXIS COMMUNICATIONS	EC-06	TANK EXTERIOR	LIGHT POLE	15' 0"	4MP
CT-21	FIXED DOME	P3265-LVE	AXIS COMMUNICATIONS	IT ROOM	OPERATIONS BLDG	WALL	15' 0"	2MP
CT-22	FIXED DOME	P3265-LVE	AXIS COMMUNICATIONS	IT ROOM	TRUCK OFFLOAD	PENDANT	10' 0"	2MP
CT-23	FIXED DOME	P3265-LVE	AXIS COMMUNICATIONS	IT ROOM	TRUCK OFFLOAD	PENDANT	10' 0"	2MP

12/20/2023

REGISTERED PROFESSIONAL ENGINEER
100084PE
OREGON
JULY 12, 2022
TIMOTHY RENSHAW
EXPIRES: 12/31/2024

no.	date	by	ckd	description
A	12/21/23	TSR	BAW	ISSUED FOR PERMIT

ISSUED FOR PERMIT ONLY

BURNS McDONNELL
9400 WARD PARKWAY
KANSAS CITY, MO 64114
816-333-9400
Burns & McDonnell Engineering Co, Inc.

date	detailed
04/24/2023	S. JESBERG
designed	checked
T. RENSHAW	B. WINTER

PDX FUEL COMPANY L.L.C

PORTLAND INTERNATIONAL AIRPORT
5000 NE MARINE DR.
PORTLAND, OREGON 97218

PDX FACILITY IMPROVEMENTS
SECURITY SCHEDULES

project	contract
153929	

drawing **TY711** rev. **A**

file 153929TY711.dwg

NOTES:

1. SEE SHEET E-001 FOR GENERAL NOTES, LEGEND AND ABBREVIATIONS.

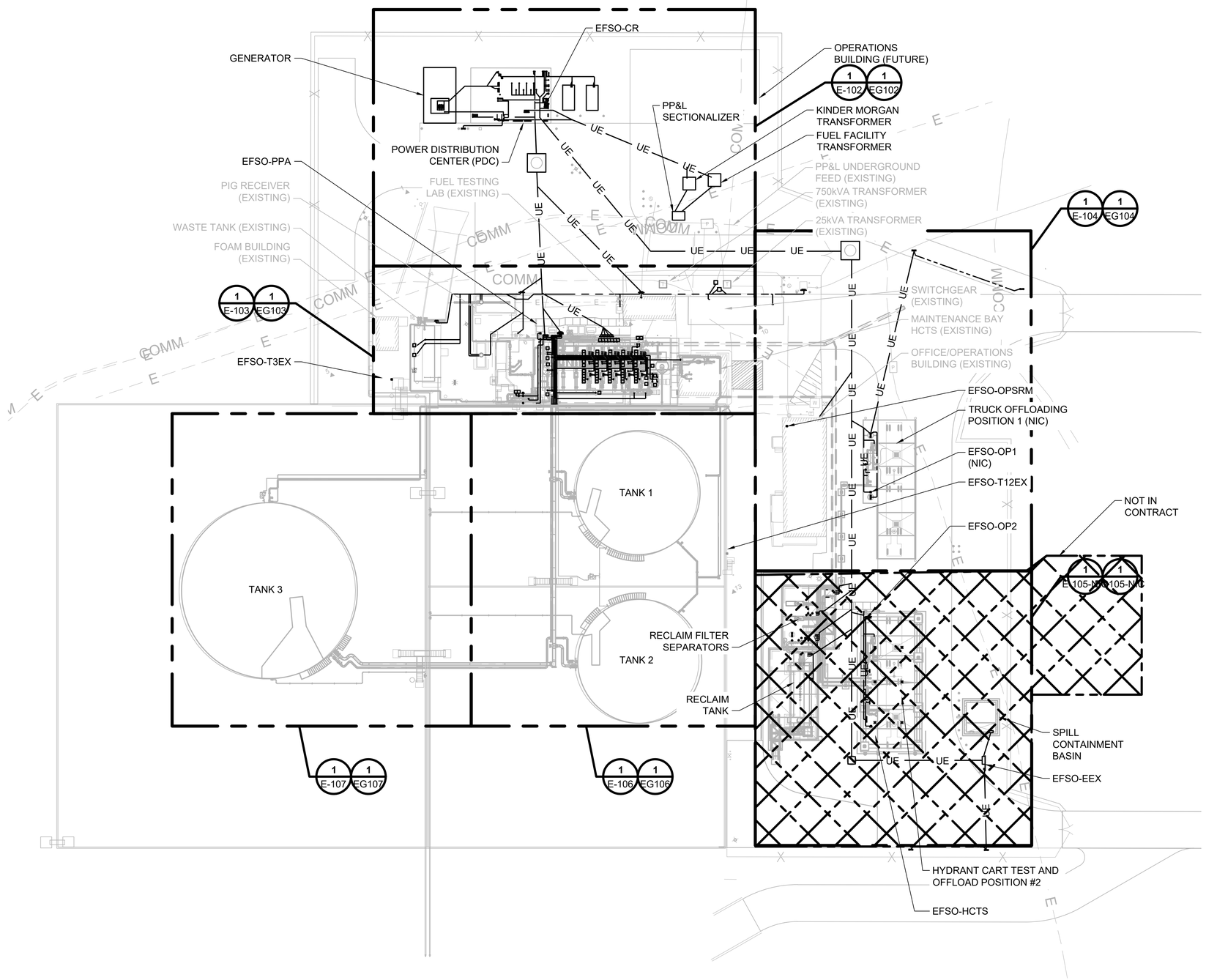

OVERALL ELECTRICAL PLAN

0 30' 60'
SCALE IN FEET

NORTH

REFERENCE DRAWING

no.	date	by	ckd	description
0	11/13/20	TSR	TSR	ISSUED FOR CONSTRUCTION
1	10/11/22	TSR	TSR	ECN-001

BURNS McDONNELL

date	detailed
10/11/2019	L. HURST
designed	checked
E. WEIDEMAN	Y. KHISLAVSKIY

PORTLAND INTERNATIONAL AIRPORT
5000 NE MARINE DR.
PORTLAND, OREGON 97218

OVERALL ELECTRICAL PLAN

project | contract

drawing **E-101** – rev. **1**

file **114425E-101.DWG**

NOTES:

1. SEE SHEET E-001 FOR GENERAL NOTES, LEGEND AND ABBREVIATIONS.
2. CONDUIT ROUTING IS SCHEMATIC IN NATURE.

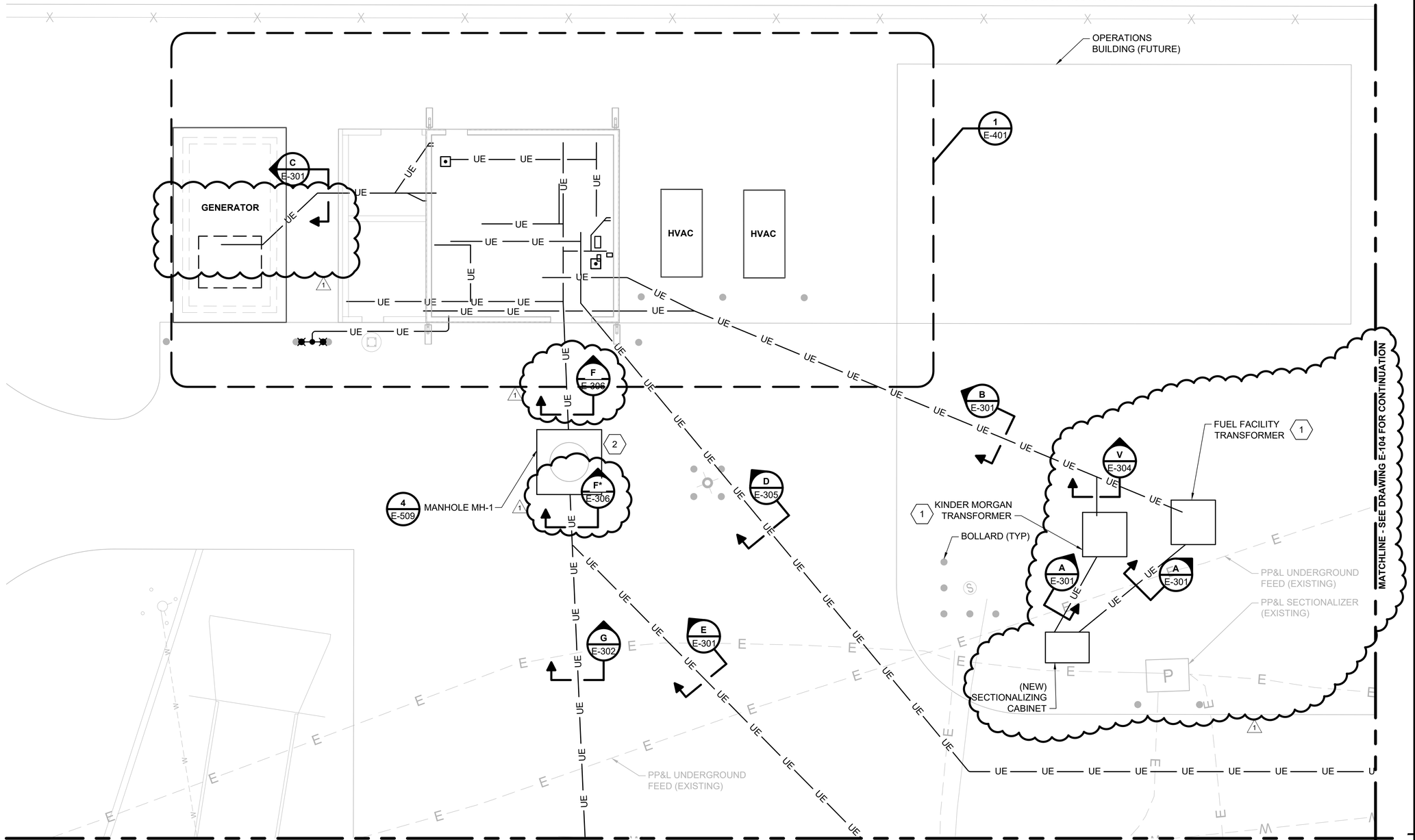

KEYED NOTES:

1. TRANSFORMER, TRANSFORMER PAD, CONDUITS TO AND FROM TRANSFORMERS AND GROUNDING SHALL BE PROVIDED PER PP&L SPECIFICATION 6-17-122 (REVISION 3).SUBCONTRACTOR SHALL COORDINATE WITH PP&L FOR INSTALLATION COORDINATION.
2. PROVIDE CONDUIT SEALS IN MANHOLE IN ACCORDANCE WITH THE NEC AND DETAIL 1 ON SHEET E-511.

OVERALL ELECTRICAL PLAN

0 4' 8' 16'
SCALE IN FEET

REFERENCE DRAWING

no.	date	by	ckd	description
0	11/13/20	TSR	TSR	ISSUED FOR CONSTRUCTION
1	10/11/22	TSR	TSR	ECN-001

BURNS McDONNELL

date	detailed
10/11/2019	L. HURST
designed	checked
E. WEIDEMAN	Y. KHISLAVSKIY

PORTLAND INTERNATIONAL AIRPORT
5000 NE MARINE DR.
PORTLAND, OREGON 97218

ELECTRICAL PLAN

project | contract

drawing E-102 – rev. 1

file 114425E-102.DWG

\\BMCD\DFS\CLIENTS\ANF\PORTLANDPORT\PDX\114425_FACUPGRADES\DESIGN\ELEC\SHEETS\114425E-102.DWG BY: LHURST

CONDUIT SCHEDULE:

1. 2"C: (BY KINDER MORGAN)
2. 2"C: (BY KINDER MORGAN)
3. 2"C: (BY KINDER MORGAN)
4. 2"C: (BY KINDER MORGAN)
5. 2"C: (BY KINDER MORGAN)
6. 2"C: I.LT.WT
7. 2"C: C.LSH.500
8. 2"C: C.HS.TP2.2, C.FSC.SG
9. 2"C: C.FSC.SLTLSHH, C.FSC.SLTLA
10. 3/4"C: C.EFSO.T3EX
11. 2"C: (BY KINDER MORGAN)
12. 3/4"C: C.EFSO.T12EX
13. 2"C: IC.FSC.TEMP
14. 2"C: IC.FSC.AFS
15. 2"C: C.FSC.LABLSH
16. 2"C: C.FSC.KM, C.EFSO.AIRSIDE
17. 1"C: (BY KINDER MORGAN)

NOTES:

1. SEE SHEET E-001 FOR GENERAL NOTES, LEGEND AND ABBREVIATIONS.

KEYED NOTE:

1. TIE IN P.MCC1.PP1 INTO EXISTING 480 VOLT PANEL LOCATED IN FUEL LAB.
2. TIE IN P.PNL6.8 INTO RELOCATED AIR COMPRESSOR LOCATED IN MAINTENANCE BAY.

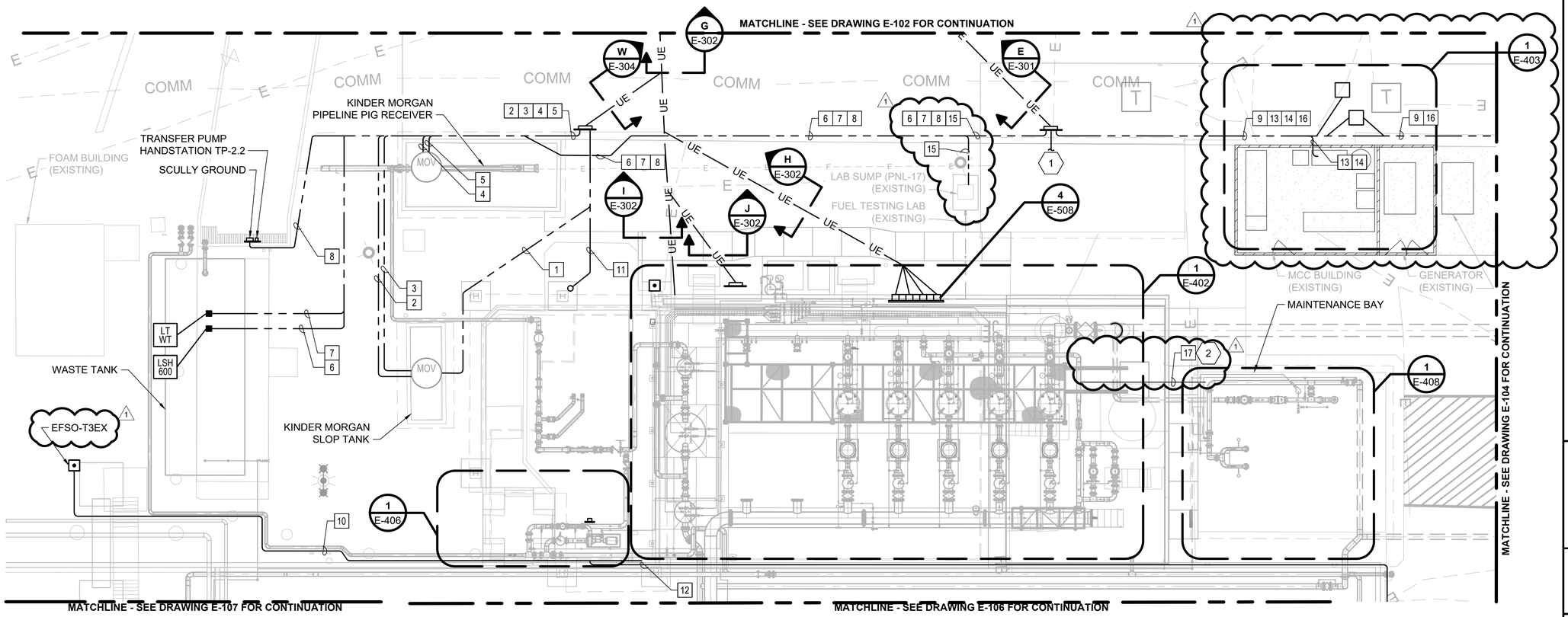

ELECTRICAL PLAN

0 4' 8' 16'
SCALE IN FEET

NORTH

no.	date	by	ckd	description
0	11/13/20	TSR	TSR	ISSUED FOR CONSTRUCTION
1	10/11/22	TSR	TSR	ECN-001

BURNS McDONNELL

date	detailed
10/11/2019	L. HURST
designed	checked
E. WEIDEMAN	Y. KHISLAVSKIY

PORTLAND INTERNATIONAL AIRPORT
5000 NE MARINE DR.
PORTLAND, OREGON 97218

ELECTRICAL PLAN

project | contract

drawing **E-103** – rev. **1**

file **114425E-103.DWG**

REFERENCE DRAWING

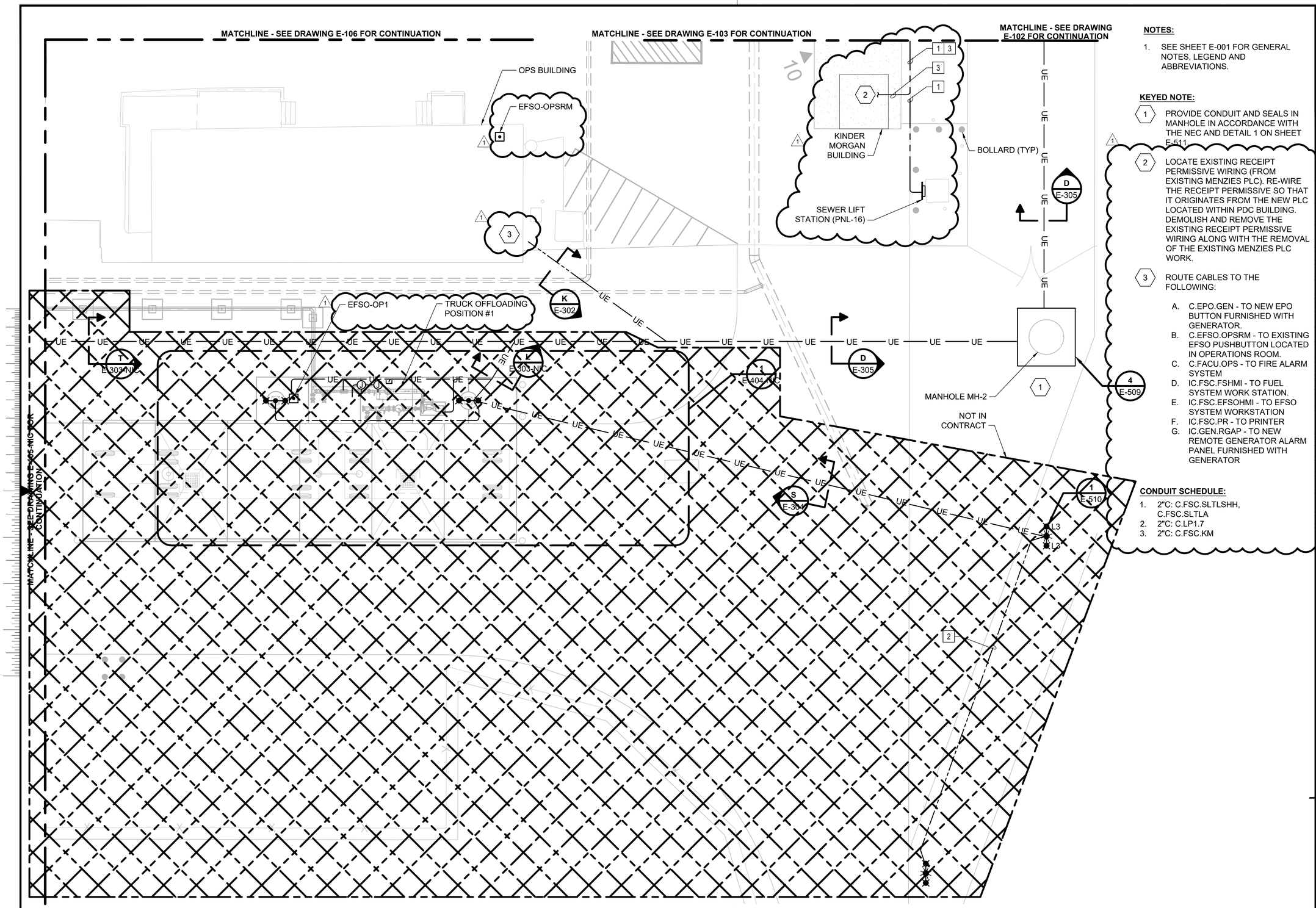

NOTES:

1. SEE SHEET E-001 FOR GENERAL NOTES, LEGEND AND ABBREVIATIONS.

KEYED NOTE:

1. PROVIDE CONDUIT AND SEALS IN MANHOLE IN ACCORDANCE WITH THE NEC AND DETAIL 1 ON SHEET E-511.
2. LOCATE EXISTING RECEIPT PERMISSIVE WIRING (FROM EXISTING MENZIES PLC). RE-WIRE THE RECEIPT PERMISSIVE SO THAT IT ORIGINATES FROM THE NEW PLC LOCATED WITHIN PDC BUILDING. DEMOLISH AND REMOVE THE EXISTING RECEIPT PERMISSIVE WIRING ALONG WITH THE REMOVAL OF THE EXISTING MENZIES PLC WORK.
3. ROUTE CABLES TO THE FOLLOWING:
   - A. C.EPO.GEN - TO NEW EPO BUTTON FURNISHED WITH GENERATOR.
   - B. C.EFSO.OPSRM - TO EXISTING EFSO PUSHBUTTON LOCATED IN OPERATIONS ROOM.
   - C. C.FACU.OPS - TO FIRE ALARM SYSTEM
   - D. IC.FSC.FSHMI - TO FUEL SYSTEM WORK STATION.
   - E. IC.FSC.EFSOHMI - TO EFSO SYSTEM WORKSTATION
   - F. IC.FSC.PR - TO PRINTER
   - G. IC.GEN.RGAP - TO NEW REMOTE GENERATOR ALARM PANEL FURNISHED WITH GENERATOR

CONDUIT SCHEDULE:

1. 2"C: C.FSC.SLTLSHH, C.FSC.SLTLA
2. 2"C: C.LP1.7
3. 2"C: C.FSC.KM

no.	date	by	ckd	description
0	11/13/20	TSR	TSR	ISSUED FOR CONSTRUCTION
1	10/11/22	TSR	TSR	ECN-001

BURNS McDONNELL

date	detailed
10/11/2019	L. HURST
designed	checked
E. WEIDEMAN	Y. KHISLAVSKIY

PORTLAND INTERNATIONAL AIRPORT
5000 NE MARINE DR.
PORTLAND, OREGON 97218

ELECTRICAL PLAN

project | contract

drawing E-104 — rev. 1

file 114425E-104.DWG

REFERENCE DRAWING

\\BMCD\DFS\CLIENTS\ANF\PORTLANDPORT\PDX\114425_FACUPGRADES\DESIGN\ELEC\SHEETS\114425E-104.DWG BY: LHURST

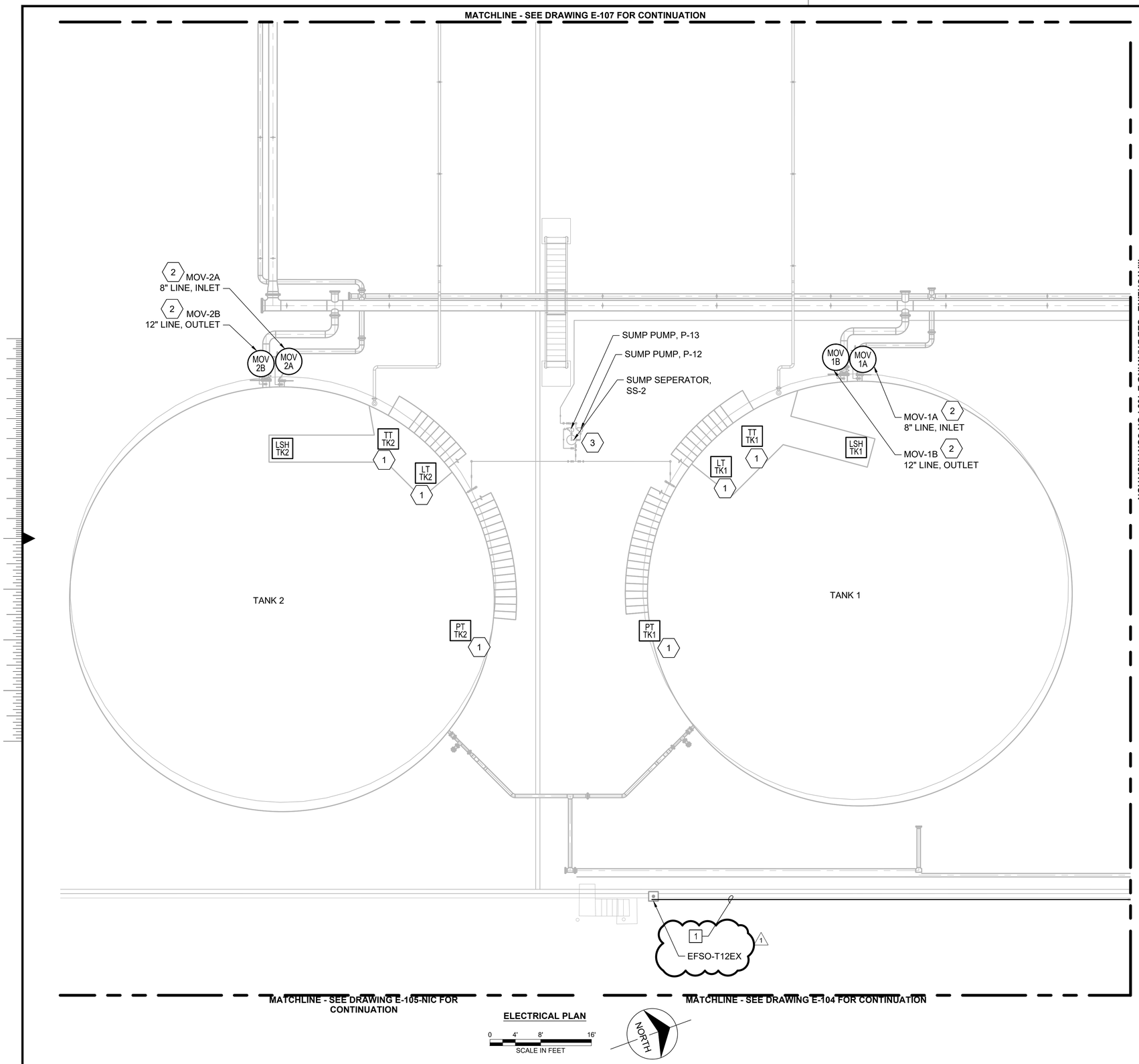

NOTES:

1. SEE SHEET E-001 FOR GENERAL NOTES, LEGEND AND ABBREVIATIONS.
2. ALL CONDUCTORS ROUTED IN THE TANK FARM SHALL UTILIZE EXISTING CONDUIT UNLESS OTHERWISE NOTED.

KEYED NOTES:

1. TANK INSTRUMENTS ARE CURRENTLY CONNECTED TO WIRELESS TRANSMITTER AT EACH TANK WHICH COMMUNICATES TO A WIRELESS GATEWAY AT THE KINDER MORGAN CANOPY. PROVIDE POWER CIRCUIT TO EACH TANK TO POWER INSTRUMENTS AND WIRELESS COMMUNICATION SYSTEM. ALL OTHER WIRING IS EXISTING AND SHALL REMAIN IN PLACE.
2. PROVIDE POWER AND CONTROL CIRCUITS TO EACH MOV. MOVS ARE EXISTING AND SHALL REMAIN IN PLACE.
3. SUMP SEPARATOR IS POWERED FROM ELECTRICAL INFRASTRUCTURE THAT SHALL REMAIN IN PLACE DURING CONSTRUCTION. NO MODIFICATIONS ARE REQUIRED.

CONDUIT SCHEDULE:

1. 3/4"C: C.EFSO.T12EX

no.	date	by	ckd	description
0	11/13/20	TSR	TSR	ISSUED FOR CONSTRUCTION
1	10/11/22	TSR	TSR	ECN-001

BURNS McDONNELL

date	detailed
10/11/2019	L. HURST
designed	checked
E. WEIDEMAN	Y. KHISLAVSKIY

PORTLAND INTERNATIONAL AIRPORT
5000 NE MARINE DR.
PORTLAND, OREGON 97218

ELECTRICAL PLAN

project | contract

drawing **E-106** – rev. **1**

file **114425E-106.DWG**

REFERENCE DRAWING

\\BMCD\DFS\CLIENTS\ANF\PORTLANDPORT\PDX\114425_FACUPGRADES\DESIGN\ELEC\SHEETS\114425E-106.DWG BY: LHURST

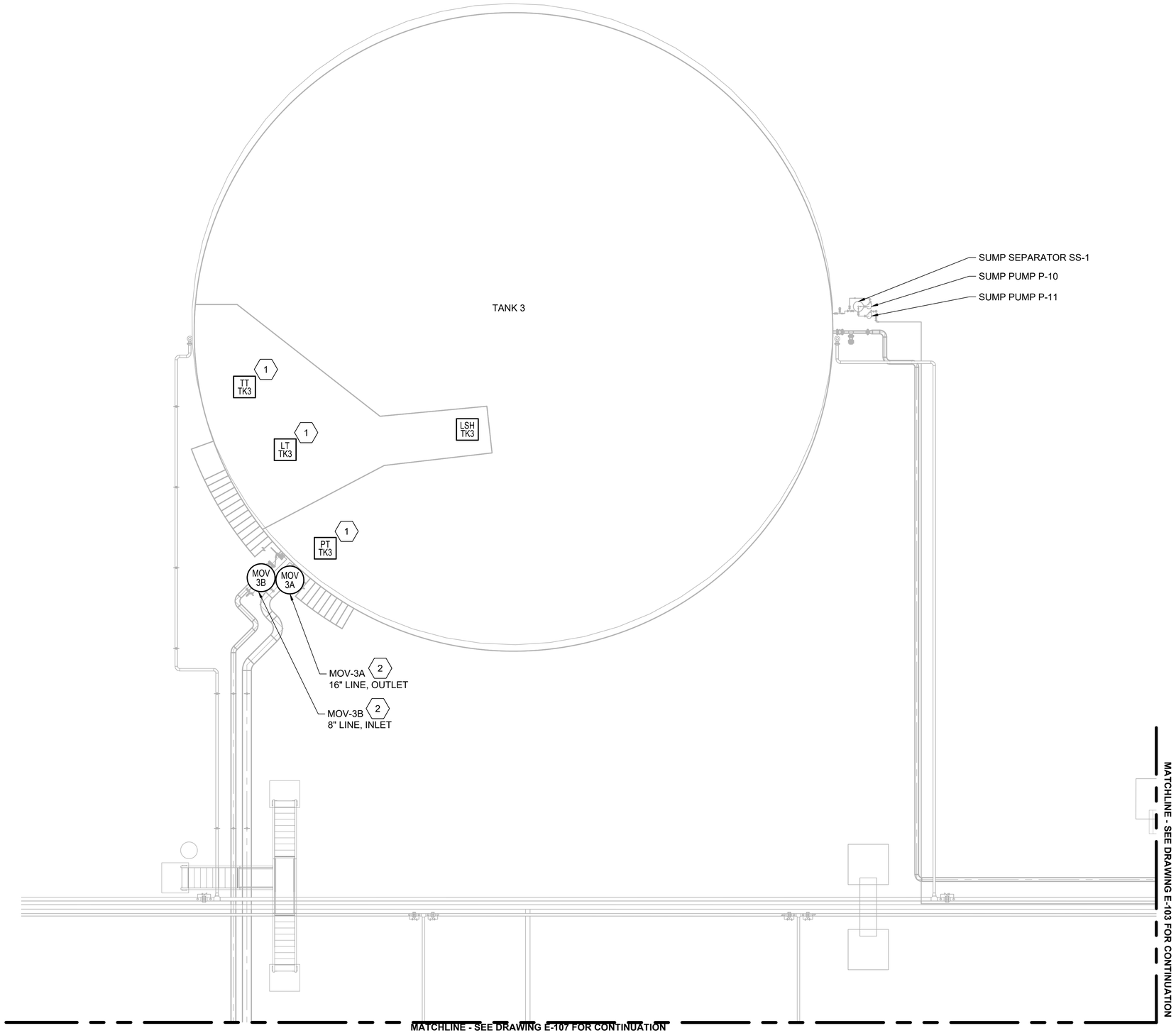

ELECTRICAL PLAN

0 4' 8' 16'
SCALE IN FEET

NORTH

NOTES:

1. SEE SHEET E-001 FOR GENERAL NOTES, LEGEND AND ABBREVIATIONS.
2. ALL CONDUCTORS ROUTED IN THE TANK FARM SHALL UTILIZE EXISTING CONDUIT UNLESS OTHERWISE NOTED.

KEYED NOTES:

1. TANK INSTRUMENTS ARE CURRENTLY CONNECTED TO WIRELESS TRANSMITTER AT EACH TANK WHICH COMMUNICATES TO A WIRELESS GATEWAY AT THE KINDER MORGAN CANOPY. PROVIDE POWER CIRCUIT TO EACH TANK TO POWER INSTRUMENTS AND WIRELESS COMMUNICATION SYSTEM. ALL OTHER WIRING IS EXISTING AND SHALL REMAIN IN PLACE.
2. PROVIDE POWER AND CONTROL CIRCUITS TO EACH MOV. MOVS ARE EXISTING AND SHALL REMAIN IN PLACE.
3. SUMP SEPARATOR IS POWERED FROM ELECTRICAL INFRASTRUCTURE THAT SHALL REMAIN IN PLACE DURING CONSTRUCTION. NO MODIFICATIONS ARE REQUIRED.

no.	date	by	ckd	description
0	11/13/20	TSR	TSR	ISSUED FOR CONSTRUCTION
1	10/11/22	TSR	TSR	ECN-001

BURNS McDONNELL

date 10/11/2019	detailed L. HURST
designed E. WEIDEMAN	checked Y. KHISLAVSKIY

PORTLAND INTERNATIONAL AIRPORT
5000 NE MARINE DR.
PORTLAND, OREGON 97218

ELECTRICAL PLAN

project | contract

drawing **E-107** – rev. **1**

file **114425E-107.DWG**

REFERENCE DRAWING

\\BMCD\DFS\CLIENTS\ANF\PORTLANDPORT\PDX\114425_FACUPGRADES\DESIGN\ELEC\SHEETS\114425E-107.DWG BY: LHURST

KEYED NOTES:

1. TRANSFORMER GROUND PREPARATION BY SUBCONTRACTOR. GROUND GRID BY UTILITY.
2. ALL PDC EQUIPMENT GROUNDING SHALL BE BY SUBCONTRACOR. EQUIPMENT GROUNDS SHALL BE ROUTED TO TWO GROUND BARS LOCATED INSIDE THE PDC. THE GROUND BARS SHALL BE CONNECTED TO EXTERIOR GROUND GRID AS INDICATED.

NOTES:

1. SEE SHEET E-001 FOR GENERAL NOTES, LEGEND AND ABBREVIATIONS.
2. PROVIDE FENCE GROUNDING PER DETAIL 2 ON DRAWING E-502 AT EACH GATE AND ALL CHANGES IN DIRECTION FOR ALL FENCING AND GATES SUPPLIED BY SUBCONTRACTOR.
3. PROVIDE LIGHTNING PROTECTION SYSTEM FOR THE POWER DISTRIBUTION CENTER PER NFPA 780, UL 96, UL 96A, AND SPECIFICATION 26 41 13.

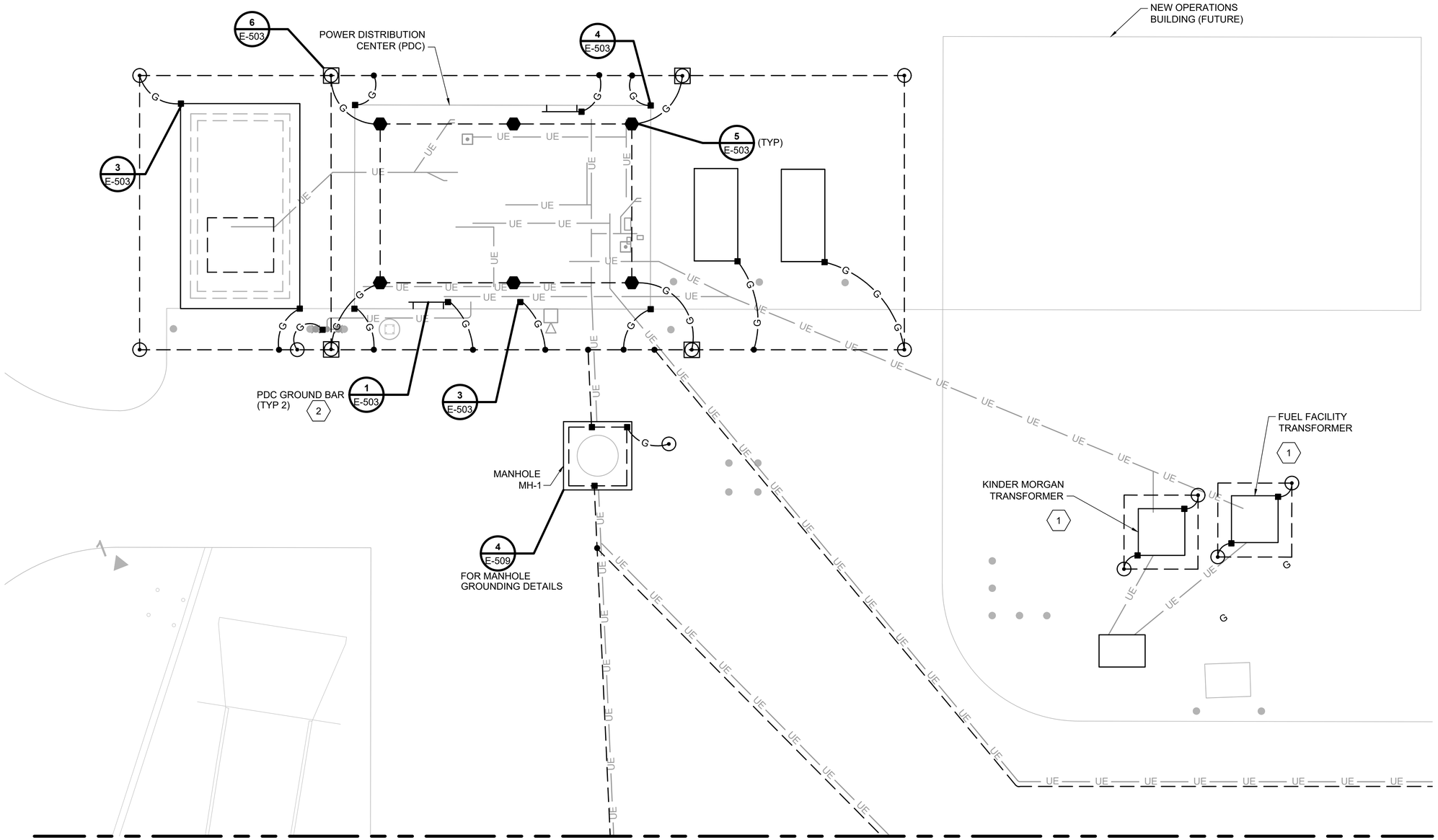

GROUNDING PLAN

0 4' 8' 16'
SCALE IN FEET

NORTH

REFERENCE DRAWING

no.	date	by	ckd	description
0	11/13/20	DSW	TSR	ISSUED FOR CONSTRUCTION
1	10/11/22	DSW	CSB	ECN-001

BURNS McDONNELL

date	detailed
10/11/2019	L. HURST
designed	checked
E. WEIDEMAN	Y. KHISLAVSKIY

PORTLAND INTERNATIONAL AIRPORT
5000 NE MARINE DR.
PORTLAND, OREGON 97218

GROUNDING PLAN

project | contract

drawing **EG102** – rev. **1**

file **114425EG102.DWG**

NOTES:

1. SEE SHEET E-001 FOR GENERAL NOTES, LEGEND AND ABBREVIATIONS.

KEYED NOTES:

(1) CONNECT NEW GROUND GRID TO EXISTING GRID AT THE FENCE.

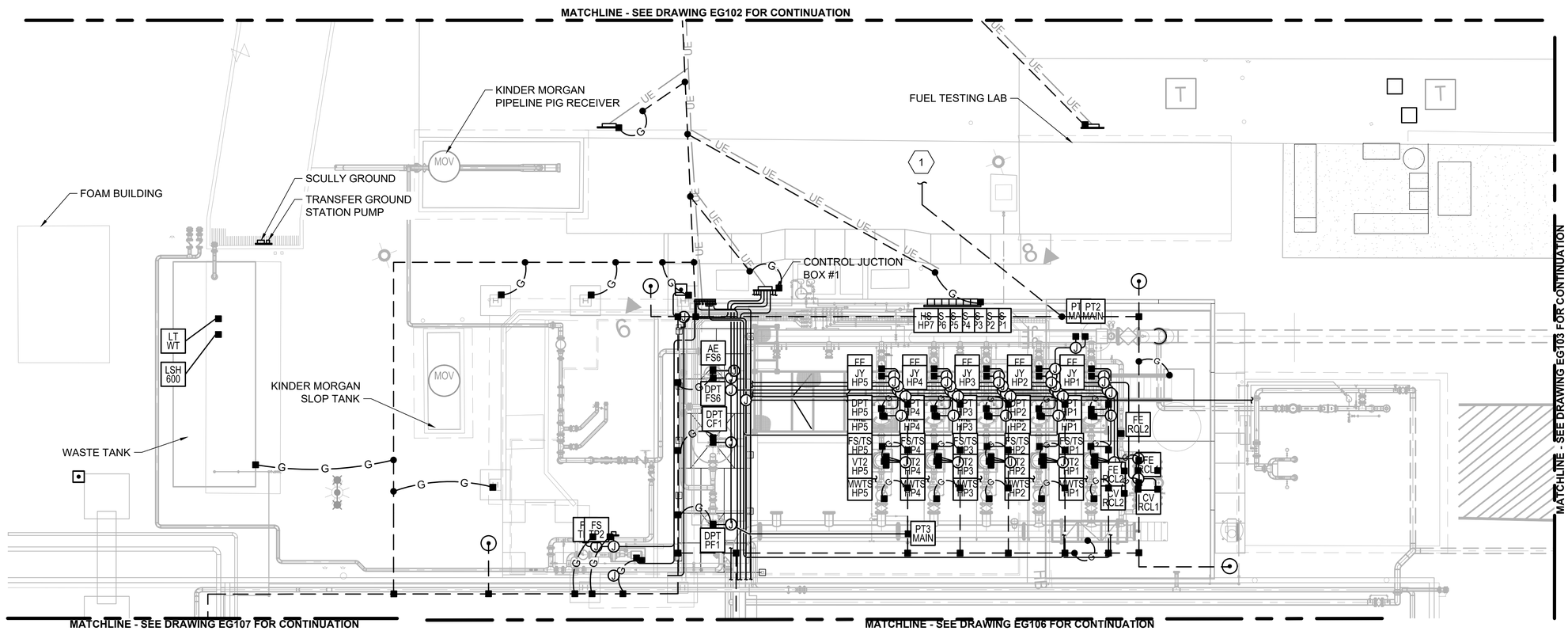

GROUNDING PLAN

0 4' 8' 16'
SCALE IN FEET

NORTH

REFERENCE DRAWING

no.	date	by	ckd	description
0	11/13/20	DSW	TSR	ISSUED FOR CONSTRUCTION
1	10/11/22	DSW	CSB	ECN-001

BURNS McDONNELL

date	detailed
10/11/2019	L. HURST
designed	checked
E. WEIDEMAN	Y. KHISLAVSKIY

PORTLAND INTERNATIONAL AIRPORT
5000 NE MARINE DR.
PORTLAND, OREGON 97218

GROUNDING PLAN

project | contract

drawing **EG103** – rev. **1**

file **114425EG103.DWG**

MATCHLINE - SEE DRAWING EG106 FOR CONTINUATION

MATCHLINE - SEE DRAWING EG103 FOR CONTINUATION

MATCHLINE - SEE DRAWING EG105-NIC FOR CONTINUATION

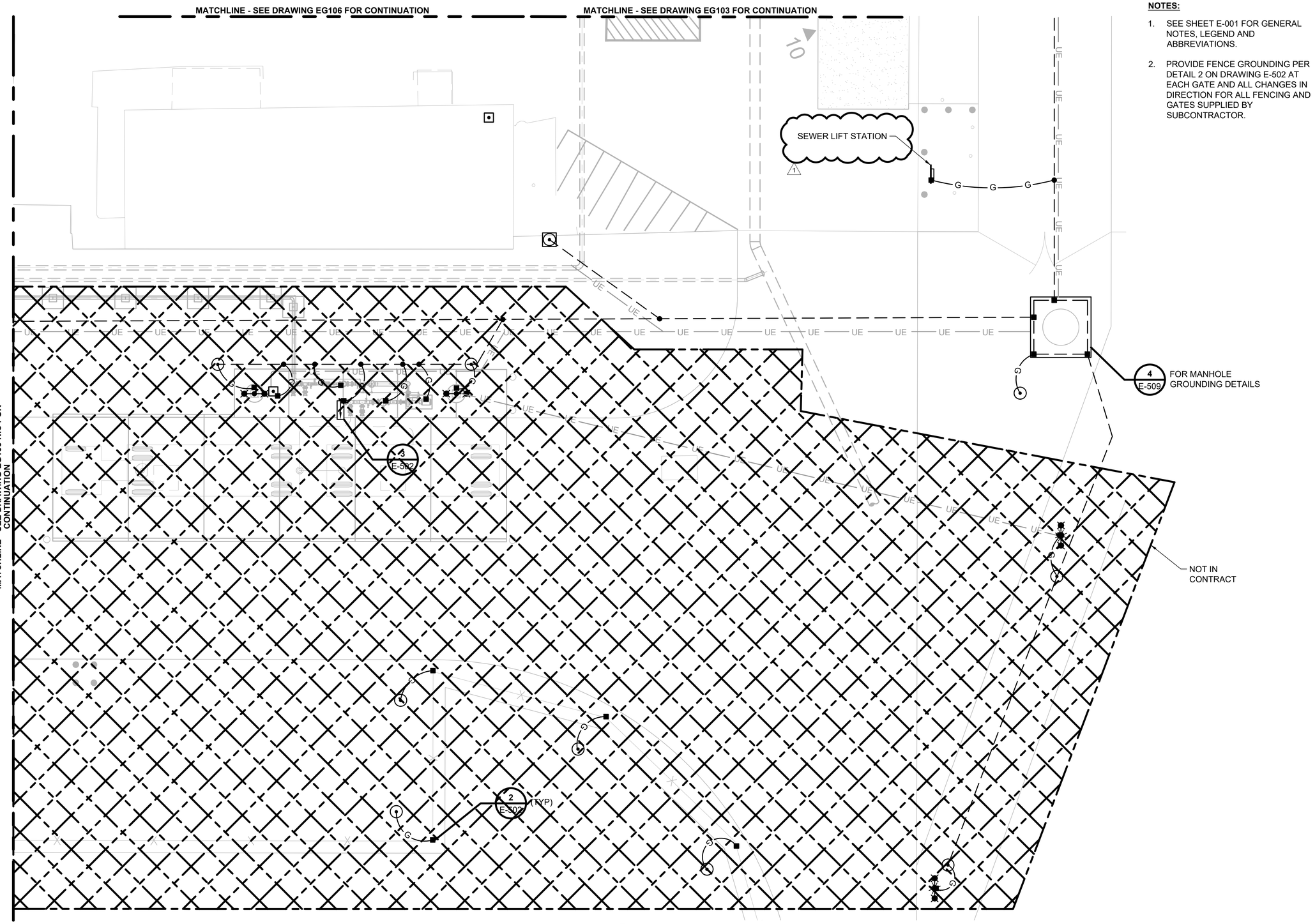

NOTES:

1. SEE SHEET E-001 FOR GENERAL NOTES, LEGEND AND ABBREVIATIONS.
2. PROVIDE FENCE GROUNDING PER DETAIL 2 ON DRAWING E-502 AT EACH GATE AND ALL CHANGES IN DIRECTION FOR ALL FENCING AND GATES SUPPLIED BY SUBCONTRACTOR.

GROUNDING PLAN

0 4' 8' 16'
SCALE IN FEET

NORTH

REFERENCE DRAWING

no.	date	by	ckd	description
0	11/13/20	DSW	TSR	ISSUED FOR CONSTRUCTION
1	10/11/22	DSW	CSB	ECN-001

BURNS McDONNELL

date	detailed
10/11/2019	L. HURST
designed	checked
E. WEIDEMAN	Y. KHISLAVSKIY

PORTLAND INTERNATIONAL AIRPORT
5000 NE MARINE DR.
PORTLAND, OREGON 97218

GROUNDING PLAN

project | contract

drawing **EG104** – rev. **1**

file **114425EG104.DWG**

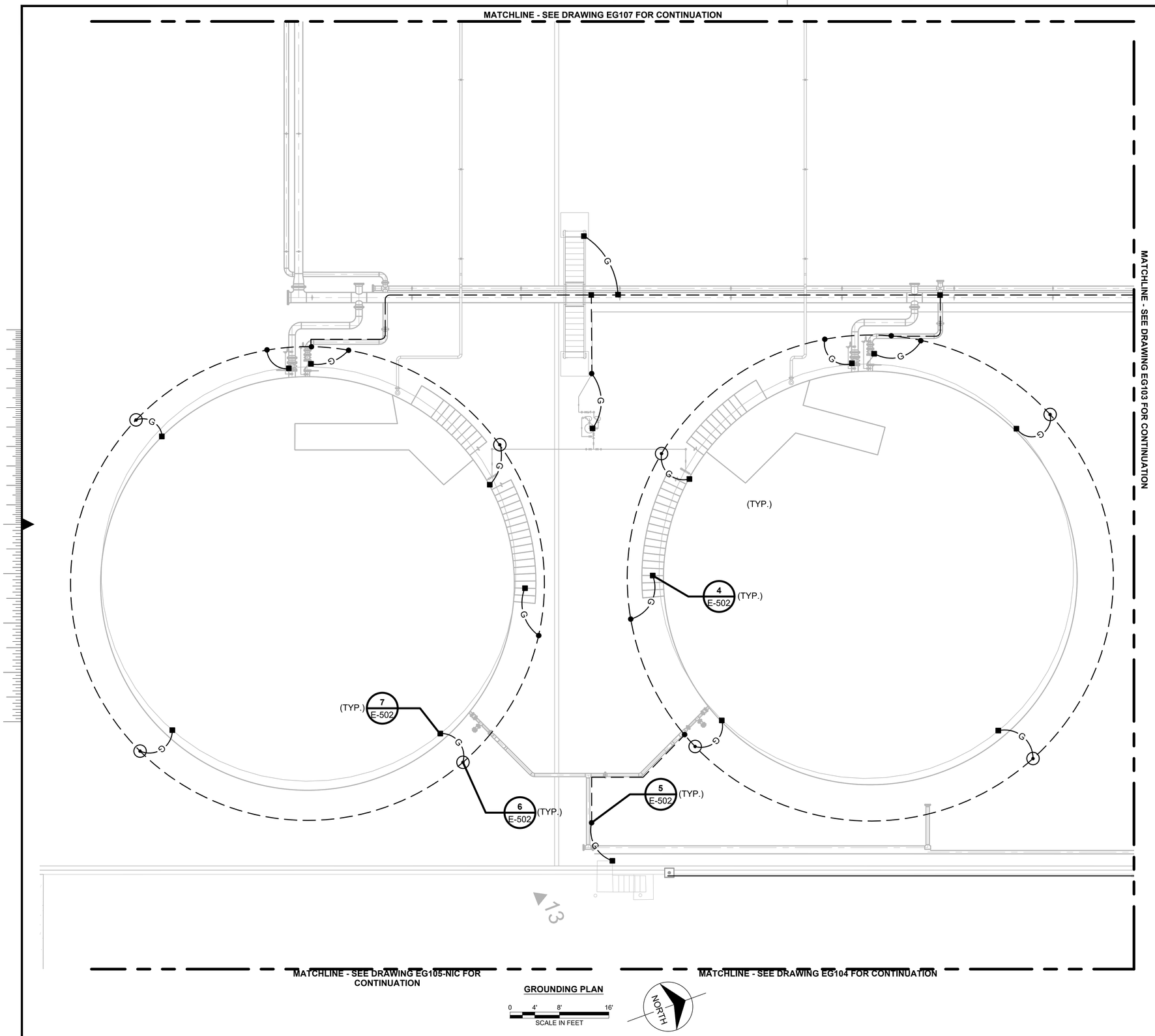

NOTES:

1. SEE SHEET E-001 FOR GENERAL NOTES, LEGEND AND ABBREVIATIONS.

no.	date	by	ckd	description
0	11/13/20	DSW	TSR	ISSUED FOR CONSTRUCTION
1	10/11/22	DSW	CSB	ECN-001

BURNS McDONNELL

date	detailed
10/11/2019	L. HURST
designed	checked
E. WEIDEMAN	Y. KHISLAVSKIY

PORTLAND INTERNATIONAL AIRPORT
5000 NE MARINE DR.
PORTLAND, OREGON 97218

GROUNDING PLAN

project | contract

drawing EG106 – rev. 1

file 114425EG106.DWG

REFERENCE DRAWING

\\BMCD\DFS\CLIENTS\ANF\PORTLANDPORT\PDX\114425_FACUPGRADES\DESIGN\ELEC\SHEETS\114425EG106.DWG BY: LHURST

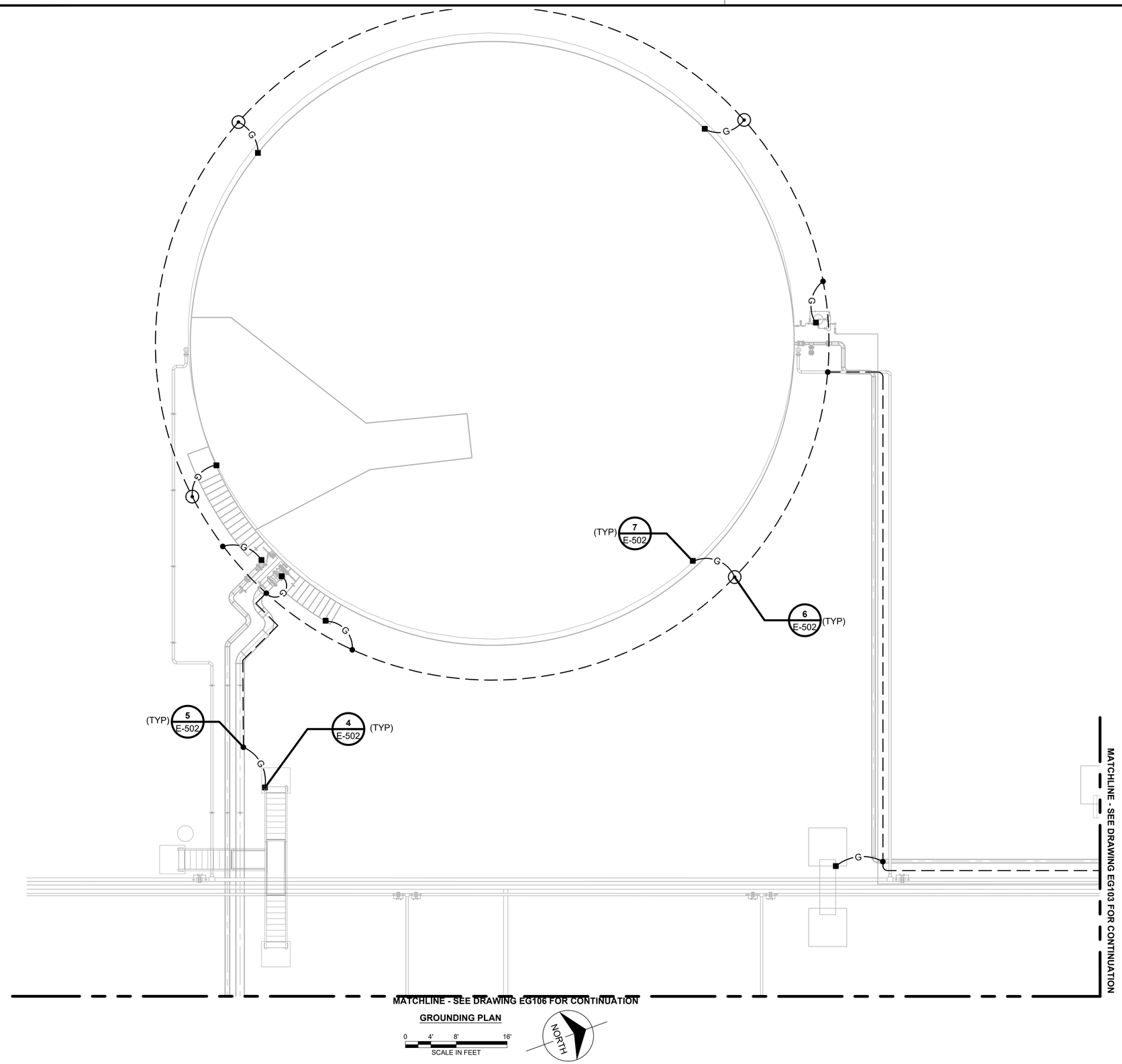

GROUNDING PLAN

0 4' 8' 16'
SCALE IN FEET

NOTES:

1. SEE SHEET E-001 FOR GENERAL NOTES, LEGEND AND ABBREVIATIONS.

no.	date	by	ckd	description
0	11/13/20	DSW	TSR	ISSUED FOR CONSTRUCTION
1	10/11/22	DSW	CSB	ECN-001

BURNS McDONNELL

date	detailed
10/11/2019	L. HURST
designed	checked
E. WEIDEMAN	Y. KHISLAVSKIY

PORTLAND INTERNATIONAL AIRPORT
5000 NE MARINE DR.
PORTLAND, OREGON 97218

GROUNDING PLAN

project | contract

drawing **EG107** – rev. **1**

file **114425EG107.DWG**

REFERENCE DRAWING

Scale For Microfilming
Millimeters
Inches

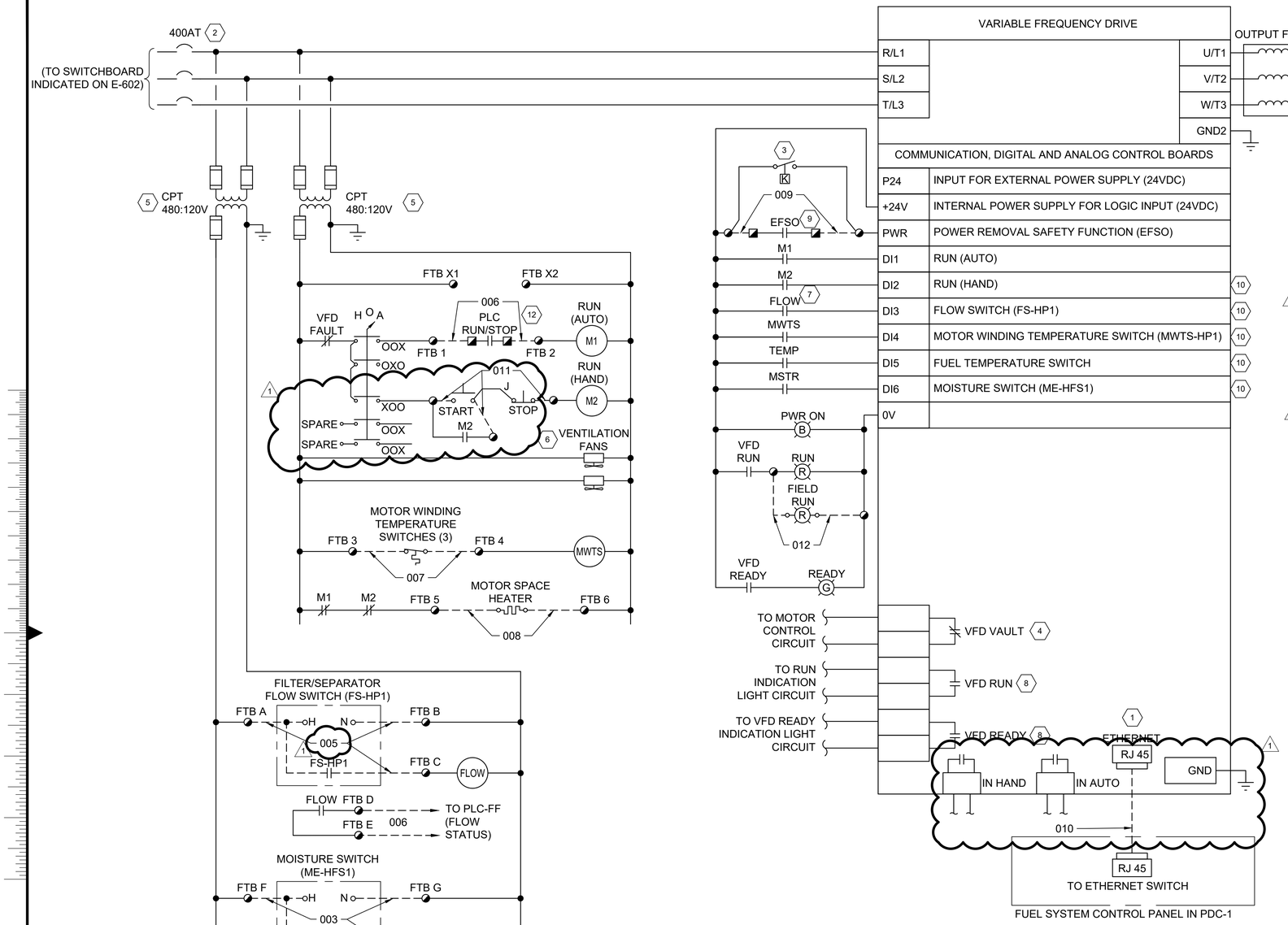

NOTES:

1. SEE SHEET E-001 FOR LEGEND, ABBREVIATIONS AND GENERAL NOTES.
2. CERTAIN DEVICES ARE LOCATED IN THE FIELD. REFER TO PLAN DRAWINGS FOR LOCATIONS.
3. SEE SECTON 25 90 01 - CONTROL SEQUENCES FOR FUEL SYSTEMS FOR COMPLETE PROGRAMMING AND OPERATIONAL REQUIREMENTS

KEYED NOTES:

1. DRIVE RUN SPEED, DIGITAL INPUT, IN REMOTE STATUS, FAULT STATUS, RUN STATUS, AND WARNINGS SHALL BE PROGRAMMED AND SENT TO THE FUEL CONTROL SYSTEM PLC VIA ETHERNET.
2. THERMAL MAGNETIC BREAKER SIZED PER MANUFACTURER RECOMMENDATION FOR DRIVE.
3. KEYED BYPASS SWITCH MOUNTED TO FACE OF VFD ENCLOSURE.
4. PROGRAM OUTPUT TO OPEN DURING VFD FAULT, FLOW ALARM (NO FLOW; FROM FLOW SWITCH), MWTS ALARM (HIGH WINDING MOTOR TEMPERATURE), FUEL TEMPERATURE SWITCH ALARM (HIGH FUEL TEMPERATURE), OR MOISTURE ALARM (FILTER/SEPARATOR HIGH WATER).
5. VFD VENDOR SHALL SIZE CPT APPROPRIATELY TO POWER ALL RELAYS, FANS, MOTOR HEATER, AND FIELD INSTRUMENTS SHOWN
6. NUMBER OF VENTILATION FANS SHALL BE AS REQUIRED BY THE EQUIPMENT MANUFACTURER.
7. PROGRAM VFD FLOW INPUT WITH AN ADJUSTABLE TIME DELAY. THE PLC SHALL PROVIDE PRIMARY SHUTDOWN RESPONSE BY REMOVING THE RUN SIGNAL DURING A NO FLOW CONDITION. THE VFD FAULT INPUT SHALL PROVIDE A SECONDARY RESPONSE IF THE PLC FAILS TO SHUT DOWN THE PUMP. WHEN THE VFD IS IN HAND MODE, THE VFD FAULT INPUT IS THE ONLY RESPONSE TO A NO FLOW CONDITION.
8. PROGRAM AUXILIARY CONTACTS TO PERFORM FUNCTION INDICATED.
9. EFSO INTERLOCK SHALL INHIBIT OPERATION OF THE VFD UNDER ALL CONDITIONS AND SHALL ONLY BE OVERRIDDEN BY THE KEYED BYPASS SWITCH.
10. CONTACTS SHALL BE WIRED AND PROGRAMMED SUCH THAT A LOSS SIGNAL SIGNIFIES AN ALARM CONDITION.
11. SEE DRAWING E-505 FOR ADDITIONAL INFORMATION REGARDING WIRING FOR MOTOR BEARING RTDS AND VIBRATION TRANSMITTERS.
12. PROGRAM OUTPUT TO OPEN AND INHIBIT CLOSE DURING HIGH BEARING TEMPERATURE (BEARING RTDS), OR EXCESSIVE VIBRATION (VIBRATION TRANSMITTERS), OR NO FLOW CONDITION (FLOW TRANSMITTER VIA PLC). HIGH BEARING TEMPERATURE ALARM SHALL NOT BE OVERRIDABLE. "NO FLOW" AND "VIBRATION ALARMS" SHALL REQUIRE MANUAL RESET VIA PLC.

LEGEND (THIS SHEET ONLY):

- VFD TERMINAL FOR FIELD WIRING
- TERMINAL IN FUEL SYSTEM CONTROL PANEL OR TANK LEVEL/EFSO PANEL
- VFD INTERNAL CONNECTION

CORRESPONDING CIRCUIT NUMBERS

	001	002	003	004	005	006	007	008	009	010	011	012
HP-1	P.VFD1.HP1	NOT USED	C.ME.HFS1	C.JY.HP1	C.FSTS.HP1	C.FSC.HP1	C.MWTS.HP1	C.HTR.HP1	C.EFSO.HP1	IC.FSC.VFD1	C.HS.HP1.1	C.HS.HP1.2
HP-2	P.VFD2.HP2	NOT USED	C.ME.HFS2	C.JY.HP2	C.FSTS.HP2	C.FSC.HP2	C.MWTS.HP2	C.HTR.HP2	C.EFSO.HP2	IC.FSC.VFD2	C.HS.HP2.1	C.HS.HP2.2
HP-3	P.VFD3.HP3	NOT USED	C.ME.HFS3	C.JY.HP3	C.FSTS.HP3	C.FSC.HP3	C.MWTS.HP3	C.HTR.HP3	C.EFSO.HP3	IC.FSC.VFD3	C.HS.HP3.1	C.HS.HP3.2
HP-4	P.VFD4.HP4	NOT USED	C.ME.HFS4	C.JY.HP4	C.FSTS.HP4	C.FSC.HP4	C.MWTS.HP4	C.HTR.HP4	C.EFSO.HP4	IC.FSC.VFD4	C.HS.HP4.1	C.HS.HP4.2
HP-5	P.VFD5.HP5	NOT USED	C.ME.HFS5	C.JY.HP5	C.FSTS.HP5	C.FSC.HP5	C.MWTS.HP5	C.HTR.HP5	C.EFSO.HP5	IC.FSC.VFD5	C.HS.HP5.1	C.HS.HP5.2

DIAGRAM 1
HYDRANT PUMP VFD SCHEMATIC

NOT TO SCALE

REFERENCE DRAWING

no.	date	by	ckd	description
0	11/13/20	DSW	TSR	ISSUED FOR CONSTRUCTION
1	10/11/22	DSW	CSB	ECN-001

BURNS McDONNELL

date	detailed
10/11/2019	L. HURST
designed	checked
E. WEIDEMAN	Y. KHISLAVSKIY

PORTLAND INTERNATIONAL AIRPORT
5000 NE MARINE DR.
PORTLAND, OREGON 97218

HYDRANT PUMP VFD SCHEMATIC

project | contract

drawing E-610 – rev. 1

file 114425E-610.DWG

\\BMCD\DFS\CLIENTS\ANF\PORTLANDPORT\PDX\114425_FACUPGRADES\DESIGN\ELEC\SHEETS\114425E-610.DWG BY: LHURST

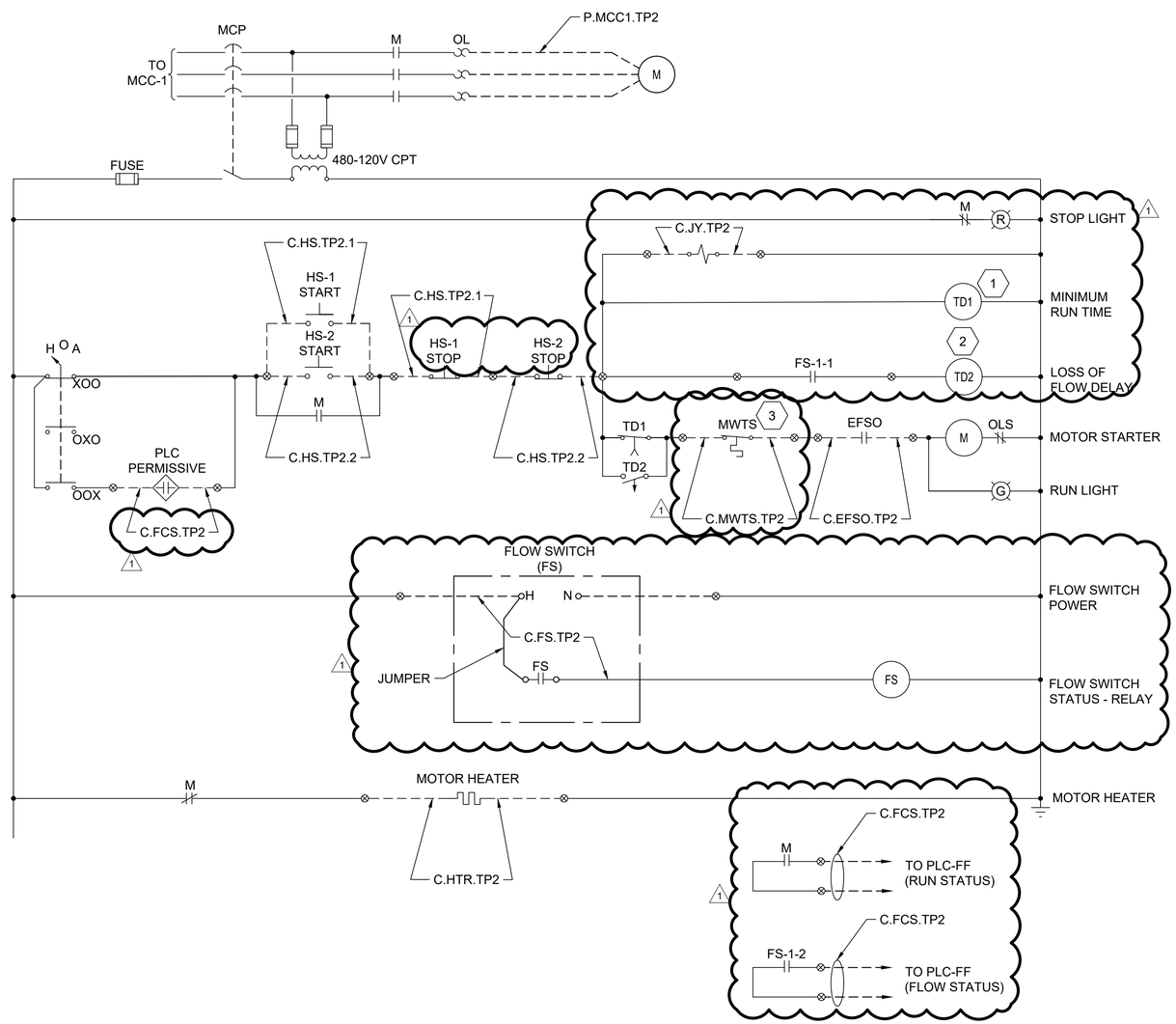

DETAIL 1 -

TRANSFER PUMP TP-2 WIRING DIAGRAM - MOTOR CONTROLLER

NOT TO SCALE

NOTES:

1. SEE SHEET E-001 FOR GENERAL NOTES, LEGEND AND ABBREVIATIONS.
2. CERTAIN DEVICES ARE LOCATED IN THE FIELD. REFER TO PLAN DRAWINGS FOR LOCATIONS.
3. SEE SECTON 25 90 01 - CONTROL SEQUENCES FOR FUEL SYSTEMS FOR COMPLETE PROGRAMMING AND OPERATIONAL REQUIREMENTS

KEYED NOTES:

1. TD1 CONTACT SHALL BE NORMALLY CLOSED, DELAY TO OPEN WHEN TD1 RELAY IS ENERGIZED. DELAY SHALL BE ADJUSTABLE FROM 1-60 SECONDS. INITIAL SETTING SHALL BE 10 SECONDS, ADJUST AS NECESSARY.
2. TD2 CONTACT SHALL BE NORMALLY OPEN, CLOSES ON TD2 ENERGIZATION AND DELAY TO OPEN ON TD2 DE-ENERGIZATION. DELAY SHALL BE ADJUSTABLE FROM 1-60 SECONDS. INITIAL SETTING SHALL BE 5 SECONDS, ADJUST AS NECESSARY.
3. MOTOR WINDING TEMPERATURE SWITCH. WINDING TEMPERATURE SWITCH SHALL BE WIRED DIRECTLY BETWEEN THE TRANSFER PUMP AND THE MOTOR CONTROL BUCKET.

no.	date	by	ckd	description
0	11/13/20	DSW	TSR	ISSUED FOR CONSTRUCTION
1	10/11/22	DSW	CSB	ECN-001

BURNS McDONNELL

date	detailed
10/11/2019	L. HURST
designed	checked
E. WEIDEMAN	Y. KHISLAVSKIY

PORTLAND INTERNATIONAL AIRPORT
5000 NE MARINE DR.
PORTLAND, OREGON 97218

TRANSFER PUMP SCHEMATIC

project | contract

drawing **E-613** – rev. **0**

-

file **114425E-613.DWG**

REFERENCE DRAWING